SMOG-HOG® Electrostatic Precipitator Owner's Manual

Model SHN

ENGINEERING YOUR SUCCESS.

KNOW YOUR EQUIPMENT

READ THIS MANUAL FIRST.

Your Smog-Hog® SHN should provide many years of trouble-free service. This manual will help you understand the operation of your SHN unit. It will also help you understand how to maintain it in order to achieve top performance. For quick future reference, fill in the system and filter information in the spaces below. Should you need assistance, call the Parker customer service number shown below. To expedite your service, have the following information available when contacting Parker.

Unit Order #: _____

Unit Model #: _____

Unit Serial #: _____

System Accessories:

_____

_____

_____

Installation Date: _____

Parker Hannifin Customer Service

1-800-343-4048

Table of Contents

SAFETY PRECAUTIONS

We have provided many important safety messages in this manual and on the SHN Electrostatic Precipitator. Always read and obey all safety messages.

This is the safety alert symbol.

This symbol alerts you to potential hazards that can kill or hurt you and others. All safety messages will follow the safety alert symbol and the word “DANGER”, “WARNING”, or “CAUTION”.

DANGER — Indicates a hazardous situation which, if not avoided, will result in death or serious injury.

WARNING — Indicates a potentially hazardous situation which, if not avoided, could result in death or serious injury.

CAUTION — Indicates a potentially hazardous situation which, if not avoided, may result in minor or moderate injury.

CAUTION — CAUTION used without the safety alert symbol indicates a potentially hazardous situation which, if not avoided, may result in property damage.

IMPORTANT SAFETY INSTRUCTIONS

WARNING

To reduce the risk of fire, electric shock, or injury when using your air cleaner, follow these basic precautions:

- Wear protective clothing and safety glasses when handling collector components or servicing the unit.
- Use proper lifting and rigging equipment to install your electronic precipitator.
- The electronic precipitator should be properly grounded prior to servicing.
- Disconnect power before servicing.
- Replace all access panels before operating.
- Do not operate the unit with component doors open.
- Electrical connections should only be made by qualified personnel and be in accordance with local and national codes and regulations.
- Do not use in explosive atmospheres.
- Do not collect emissions which are explosive.
- Use non flammable cleaners.
- Keep flammable materials and vapors, such as gasoline, away from unit.
- The unit should be inspected frequently and contaminants removed to prevent excessive accumulation which may result in flash-over or fire damage.
- Operate only in a safe and serviceable condition.
- Operating temperature to the air stream should not exceed 120° F (49° C).

COMBUSTIBLE DUST HAZARDS –
SMOG-HOG® and DUST-HOG® Pollution Control Systems

Pursuant to National Fire Protection Agency (NFPA) Standards, the owner/user is required to test their dust mixtures to evaluate and understand potential combustion or deflagration hazards that may exist. In addition, NFPA standards require the owner/user to perform and have record of a Dust Hazard Analysis (DHA) if there is potentially a combustible material involved within or exposed to the process.

The DHA serves as a systematic review of the process to:

1) Identify where fires and explosions can occur;

2) Identify the potential causes and consequences, and;

3) Determine if existing and proposed safeguards are sufficient.

It is the responsibility of the owner/user to evaluate, interpret and document any associated risk in their process including adherence and compliance to any and all applicable local, state and federal codes, standards, laws and regulations.

It is the sole responsibility of the equipment owner/user of record to coordinate and perform sample material collection and combustion/explosivity testing of any and all dust and material that will be extracted and filtered by the Air Pollution Control (APC) filtration equipment and to notify Parker of the results prior to any discussion involving equipment specification and solution recommendation. It is recommended to utilize a Certified Industrial Hygienist (CIH) or certified safety expert that is properly trained, licensed and approved and to use a licensed and approved dust testing facility for proper dust and material analysis, testing protocol and reporting procedures. A sample of testing facilities and list of Industrial Hygiene (CIH) and other occupational and environmental health and safety (OEHS) consultants can be located through AIHA (American Industrial Hygiene Association) website.

To minimize the risk of fire or explosion, user must ensure proper installation, operation and maintenance of Parker equipment. Since application, installation, operation and maintenance are beyond the control of Parker, Parker disclaims any liability or responsibility for damage from fires or explosions regardless of origin. Parker recommends that all APC dust collection equipment, installation and application conform to any and all applicable local, state and federal standards, codes, laws and regulations including the addition of appropriate fire or explosion protection systems including but not limited to venting, mitigation, suppression and isolation when and where required. Installation of Parker equipment should be by a licensed contractor that is also experienced in potential fire and explosion hazards and adheres to related local, state and federal codes, standards, laws and regulations. Parker is not an expert nor certified design consultant in relation to spark, fire or explosion mitigation including but not limited to detection, mitigation, suppression and isolation pf combustible dusts and materials. Therefore, Parker recommends that any industrial air filtration system recommendation, design or solution be reviewed, approved, stamped and signed by an industry expert consultant in air filtration systems, combustible dust/materials or certified safety expert such as a Certified Industrial Hygienist (CIH) or a Certified Professional Engineer (PE) who is a licensed and certified expert with industrial filtration system design and application including adherence and compliance to any and all applicable local, state and federal codes, standards, laws and regulations.

Pursuant to Parker's Offer of Sale (terms and conditions) and by accepting the purchased equipment, Buyer and owner/user agree to defend, indemnify, and hold harmless Parker, its successors, assignees, suppliers, shareholders, directors, officers, employees, agents, and affiliated companies from all losses, costs, damages, demands, claims, liabilities, fines, penalties or any other expenses (including attorneys' fees, court costs, and expert fees) (collectively "losses"), caused or contributed to in any way by Buyer or owner/user's failure to follow these instructions and/or failure to properly install, apply, operate, or maintain the equipment purchased from or supplied by Parker, or losses caused or contributed to in any way by Buyer's and owner/user's failure to provide accurate information, specifications or dust explosivity values.

Smog-Hog® Electrostatic Precipitator Installation and Service

SHN-10

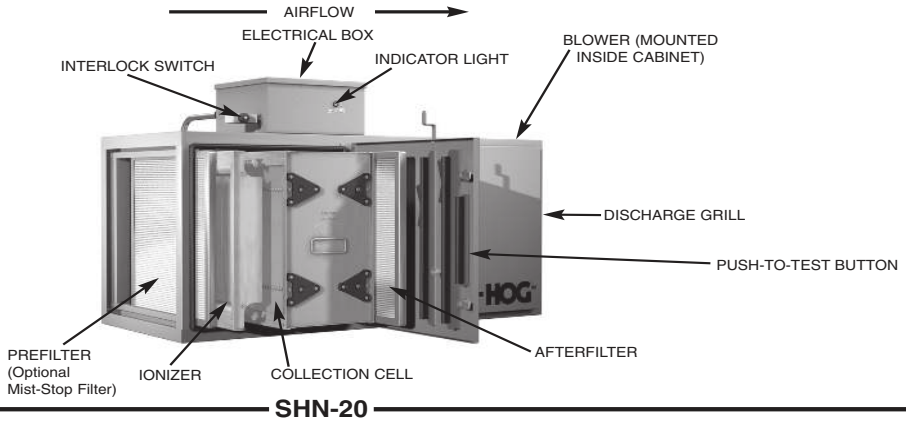

SHN-20

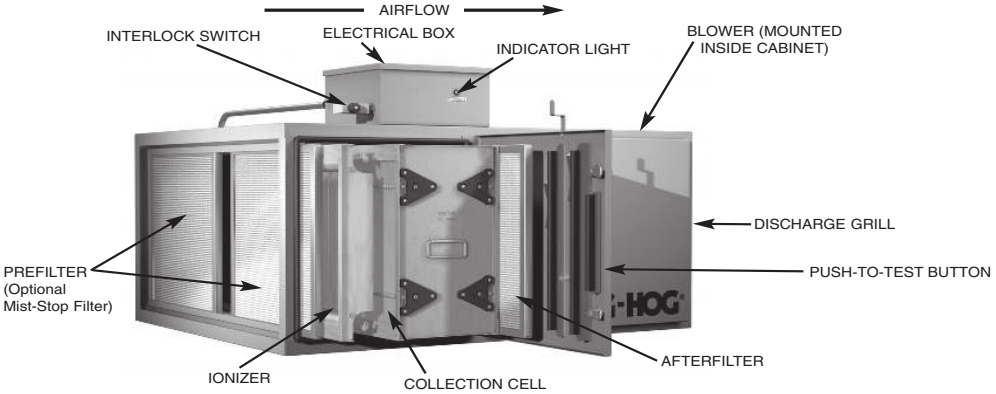

SHN-40

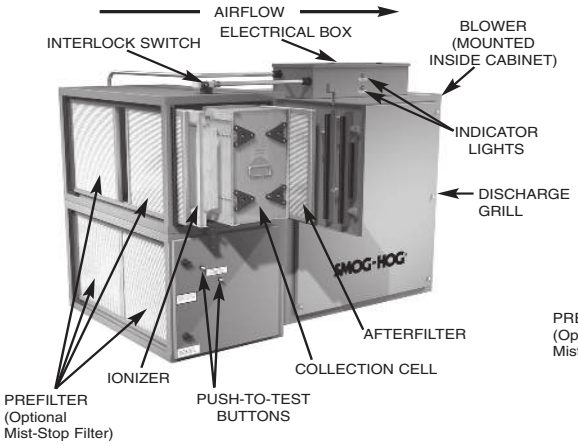

SHN-50-T

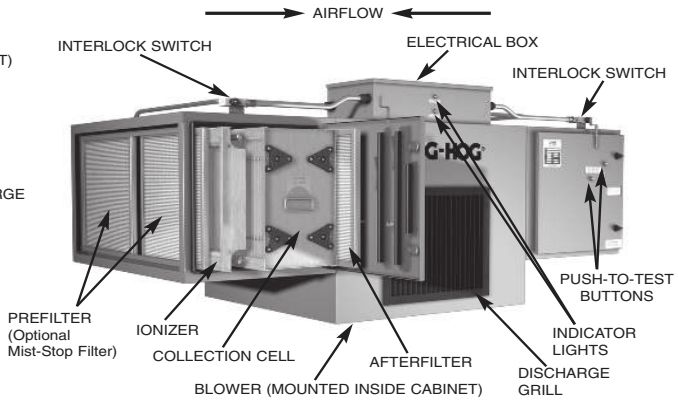

Smog-Hog Nomenclature

Smog-Hog electronic air cleaners are available in a variety of configurations and sizes. Codes shown below identify characteristics which might be built into a given unit. The model number completely identifies the design and can be found on the unit nameplate. For example, a model designated SHN-10-H could be defined according to descriptions listed below (see bold):

SHN - SMOG-HOG N-Series
10 - Airflow in 100s of CFM (i.e., 10 @ 1,000 CFM, etc.)
H - High static pressure blower*
HH - Higher static pressure
XB - Without blower*
T - Tee-shaped unit (SHN-50 only)
M - Double pass models*
*Not available on SHN-50 models

Models SHN-10, SHN-20, SHN-40 & SHN-50

This type of Smog-Hog is a self-contained, two-stage, Penney-type, electrostatic precipitator complete with fully-interlocked, energy-limiting, high voltage power supply, mechanical prefilter, ionizer, collection cell, afterfilter, blower assembly, indicator light, interlock switch and push-to-test buttons.
Models available include:

SHN-10 SHN-40
SHN-20 SHN-50-T

Models SHN-10-XB, SHN-20-XB, SHN-40-XB

This type of Smog-Hog is a self-contained, two-stage, Penney-type, electrostatic precipitator complete with fully-interlocked, energy-limiting, high voltage power supply, mechanical prefilter, ionizer, collection cell, afterfilter, indicator light, interlock switch and push-to-test buttons. XB units are designed for use in a ducted application where a blower is included in the existing ventilation system.
Models available include:

SHN-10-XB
SHN-20-XB
SHN-40-XB

SHN Series Voltages Available

Voltage	Phase	HZ	Voltage	Phase	HZ
115	1	60	230	3	60
115	1	50	400	3	50
208	3	60	460	3	60
220	3	50	575	3	60

1. Inspection Note

Upon receipt of your unit, check for any shipping damage. A damaged carton indicates that the equipment may have received rough handling during shipping that may have caused internal damage. Notify your delivery carrier and enter a claim if any damage is found.

2. Installation Planning

A. Unducted or Area Capture

Consideration should be given to the placement of the precipitator to maximize its effectiveness. The number of units required to clean the air will depend on the layout of the room and the concentration of pollutants.

Because it is necessary to develop proper airflow patterns, the placement and number of precipitators should be as suggested by Parker or your local representative.

B. Ducted or Source Capture

When your Smog-Hog is used as a ducted source collector, the enclosure or pick-up hood design is important for adequate capture of contaminants. Drive pulleys and belts have been selected to provide proper airflow at the design static pressure specified. Pulleys and belts should not be replaced without first contacting Parker Customer Service at 1-800-343-4048.

⚠ CAUTION

Do not operate this equipment in the presence of combustible vapors or gases.

C. Access Clearance

Allow at least 36” (914mm) door swing and access clearance on the door side of the unit. All models require 18” (457mm) clearance from the electrical junction box on top of the unit to any overhead obstruction to allow adequate access.

3. Installation

Carefully remove the unit from the shipping container, inspecting for shipping damage.
For ease of installation, open access door and remove the cell, ionizer and filters from the cabinet.

Ceiling mounted units are suspended by means of 1⁄2” threaded rods run through weld nuts in the top corners of the units. (Refer to page 4 and 6 for weld nut locations on all but XB models.)
Additional support should be used for auxiliary equipment or ducting.

Reinstall the components removed earlier to facilitate the mounting of the unit.

A. Unit Mounting

Models SHN-10 and SHN-20 are designed for suspended mounting. Units can be provided with eyebolts for chain hanging, but the length of chain should be kept level. The preferred method of hanging is by threaded rods through the top of the cabinet. If chain is used, it should be of the welded link type, with a 2,000 lb. (8900 N.) test strength or better. “S” hooks used for connections should be closed. The chain should be hung vertically. If any angle is introduced, the chain and fasteners should be sized to handle the added tension. Models SHN-40 and SHN-50 may be suspended by rods but are not approved for chain hanging.

⚠ CAUTION

The Smog-Hog should not be used for support of personnel or material. Check with local building code/structural engineer to ensure proper installation to roof truss or column.

B. Metal Truss Supported Ceilings

Figure 1 shows an SHN-20 unit suspended from a metal truss supported ceiling. The customer should take care to determine that the truss will be sufficient to support the weight. As shown, angle iron braces are secured between two steel trusses. Rod length should be kept to a minimum.

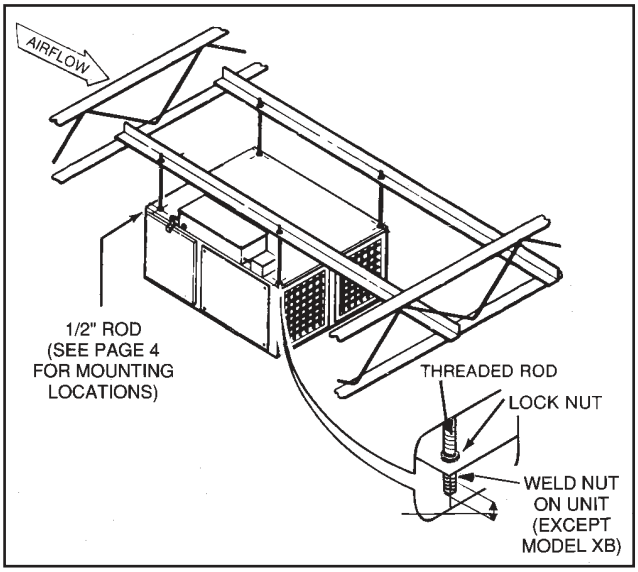

Figure 1
Ceiling Mounted Unit

C. Column or Wall Mounting

Figure 2 shows an SHN-50 (T-shaped) unit suspended from a cantilevered frame from which the 1⁄2” threaded rods are suspended. Rods are threaded into weld nuts located at the corners of the blower cabinet. Rod length should be kept to a minimum.

4. Drains

All SHN units are supplied with 1-1⁄2” FPT drain connections. If dry material is to be collected, then drains should be plugged. If contaminant will run off the components, a 1-1⁄2” drain trap should be installed. Refer to illustration.

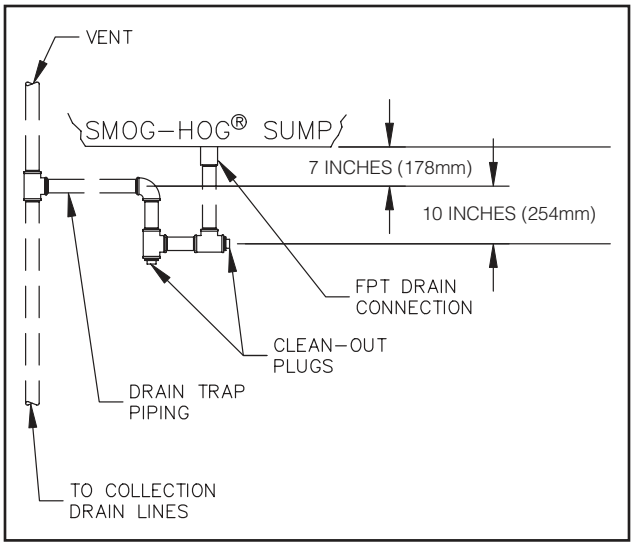

Notes: Main drain line should be sufficiently sloped, 1.5 inches (38mm) diameter and vented. All plumbing should conform with all state and local codes.

Appropriate design criteria as provided by a plumbing/mechanical contractor should be utilized to ensure proper control of drainage from the SHN Unit.

5. Discharge Grill

The four-way adjustable air discharge grill can be set to any open position desired.

A. Unducted Installation (for area capture)

The discharge grill should be set for maximum contaminant capture and even dispersion of clean air. The pattern should be suggested by Parker or your local representative.

B. Ducted Installation (for direct capture)

The discharge grill can be set to any position compatible with personnel comfort.

6. Electrical Requirements

⚠ CAUTION

When electrical control panels are supplied by others, an electrical interlock should be provided for the power pack circuit and the SHN exhaust blower. The power pack circuit should not be on-line with the exhaust blower off-line. This is an unsafe condition.

The only electrical connection required is a power source to the terminal block as shown in the wiring diagram (Refer to Appendix B) inside the top electrical junction box. Refer to unit nameplate for voltage specifications.

Units are factory wired for the voltage requirement indicated to Parker by the customer. The electrical box has knockouts. Therefore, whatever electrical connectors are standard in your plant may be used for the power line into the unit.

The power switch for operating the unit and any fused disconnect switch should be supplied by the customer and located remotely (not supplied as part of the Smog-Hog).

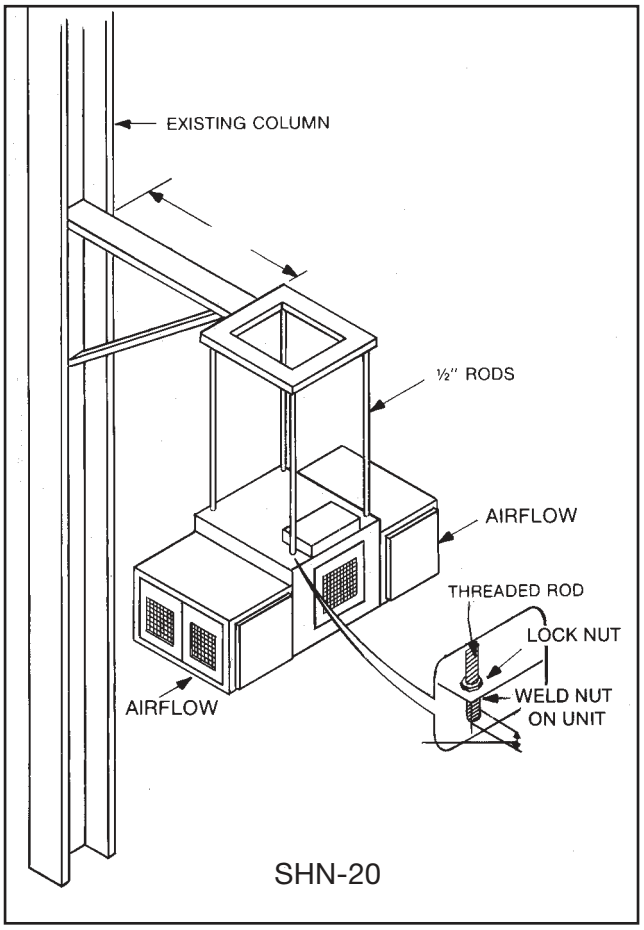

Figure 2
Column Mounted Unit

7. Motor/Blower Checkout

For proper airflow, the blower should be operating in the correct direction. If the blower is operating in the reverse direction, air will move in the proper direction, but at significantly reduced rates. Refer to Figure 3 for access to blower compartment. To check rotation:

1. Place SHN unit off line.
2. Remove or open blower panel to the SHN unit to observe rotation.
3. Place SHN unit on line for less than one minute.
4. Place SHN unit off line.
5. As the blower pulley slows down, observe the direction of rotation.
6. Note directional arrow located on the blower housing.

⚠ WARNING

Extreme care should be exercised when operating blowers with motor/drive belts exposed. Loose fitting clothing can easily be drawn into these moving parts.

7. If blower wheel is not rotating in the correct direction, disengage main 3-phase fused disconnect switch.

⚠ WARNING

Do not attempt to rewire electrical “live” connections.

8. Open power panel and reverse any two of the three wires at the terminal strip (L1, L2 and L3).
9. Engage the fused disconnect and place SHN unit on line, confirming blower rotation.

When the Smog-Hog is used in a ducted application, blower speed is increased to compensate for the static pressure loss of the ducting. After ducting is installed, and with the unit operating, measure the current flow to the unit using an amp probe. The ampere reading should not exceed the FLA rating on the motor nameplate. If current flow is excessive, reduce blower speed by adjustment of the variable pitch sheave on the motor.

⚠ CAUTION

If the blower is rotating backwards, some air motion is noticeable. If the blower is rotating correctly, the access door will be closed by the negative pressure within the cabinet.

Single-phase units (i.e. 115/1/50-60) are prewired for proper rotation and line hook-up. Simply connect to single phase input circuit and unit is ready for operation.

Input to the high voltage power pack should not exceed 130 Volts, 60 Hertz. This is supplied by a power source or the step-down transformer as shown in the wiring diagram inside the main electrical junction box on all units. Refer to Appendix B.

The indicator light on the unit is illuminated when high voltage is present at the power pack. If the indicator light is flashing or fails to illuminate when power is on-line, refer to section 11.

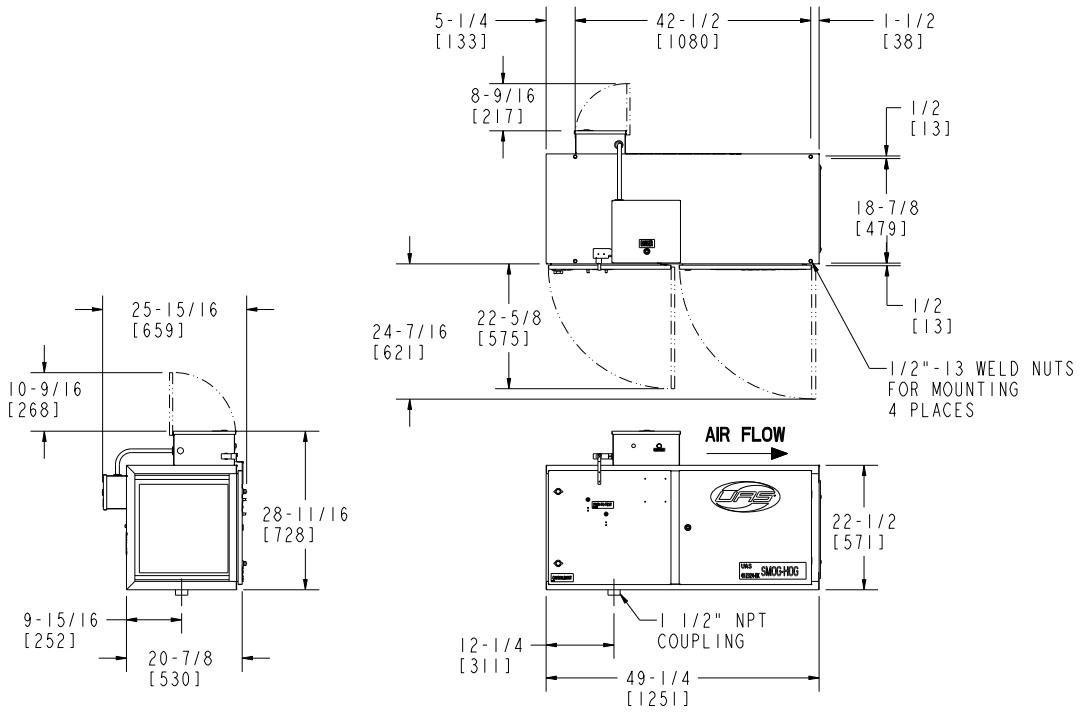

SHN-10
Dimensions and Mounting Hole Locations

61-10033-0001

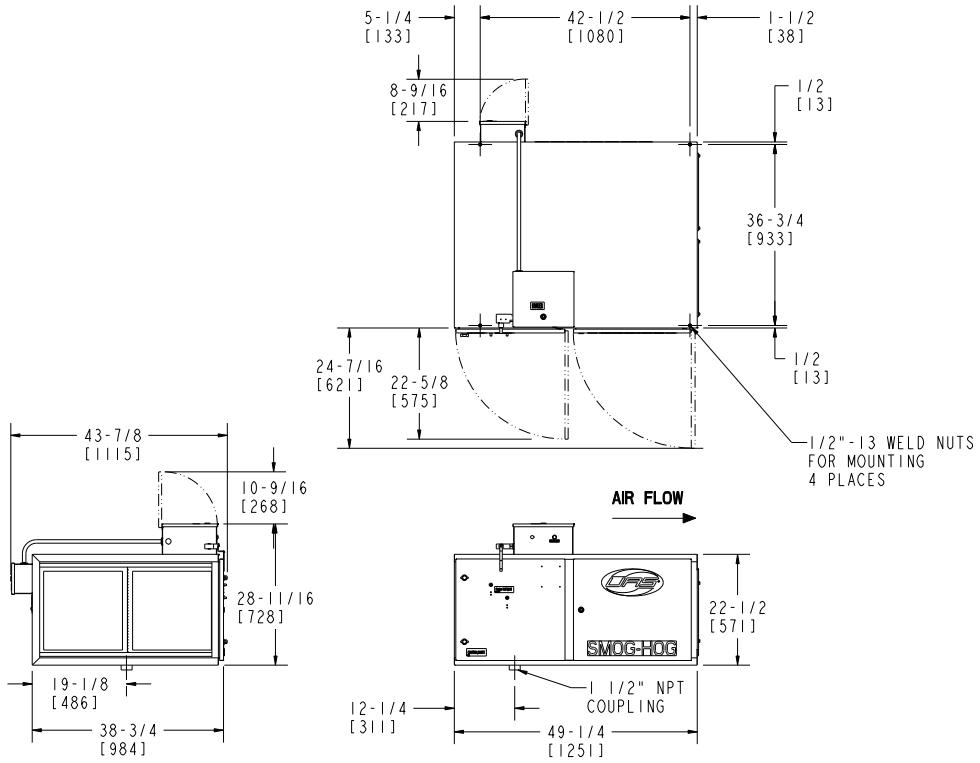

SHN-20
Dimensions and Mounting Hole Locations

61-10033-0002

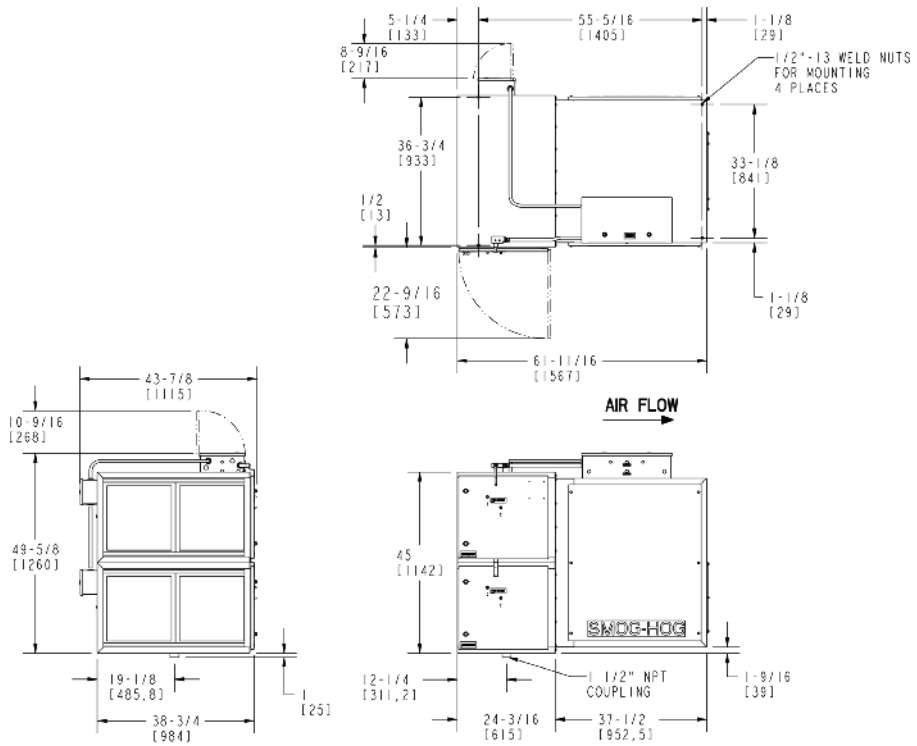

SHN-40
Dimensions and Mounting Hole Locations

61-10033-0003

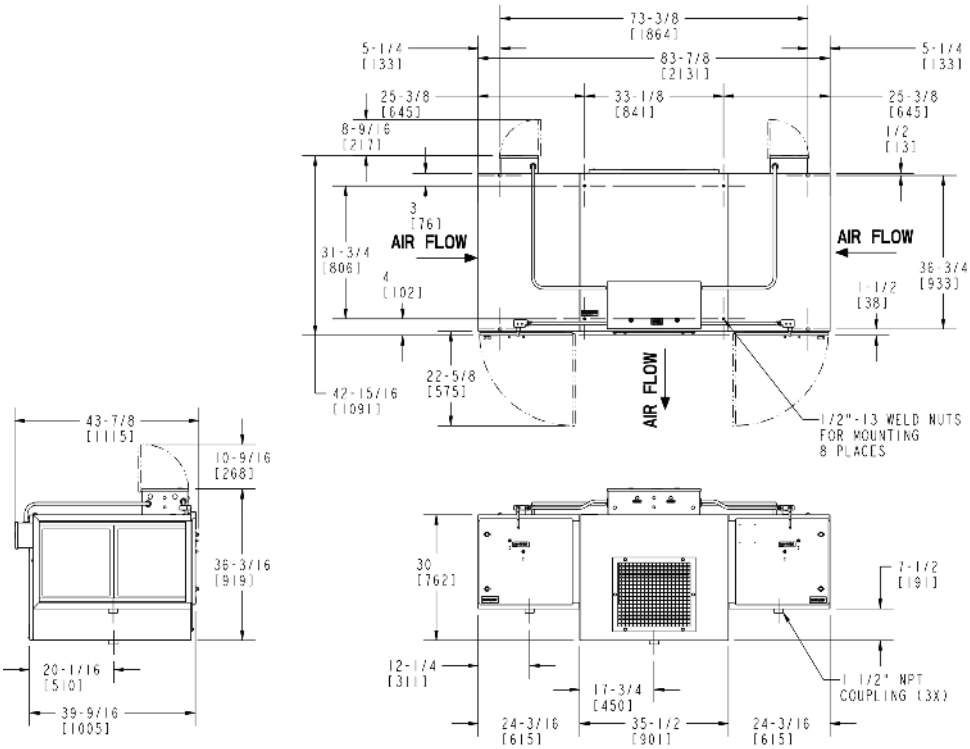

SHN-50-T
Dimensions and Mounting Hole Locations

61-10033-0004

SMOG-HOG Hanging Weights	
Model	Weight (lbs)
SHN-10-XB	160
SHN-10	300
SHN-10-M	340
SHN-20-XB	420
SHN-20	450
SHN-20-M	650
SHN-40-XB	950
SHN-40	975
SHN-40-M	1,300
SHN-50-T	680

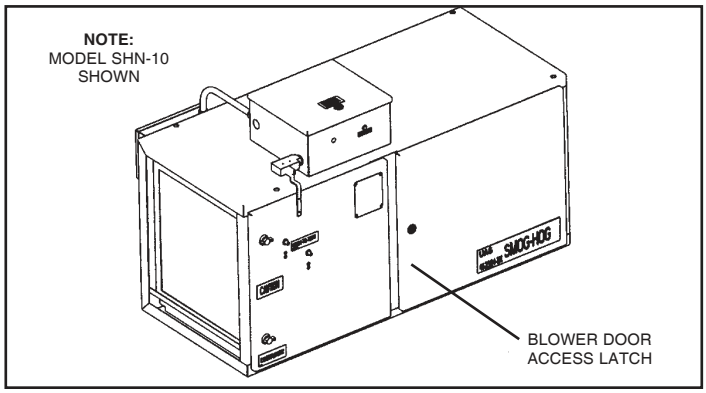

Figure 3
Unit Access

Drive Set Access Procedure

1. Shut down blower.
2. Open blower access door using 10mm or 3/8” hex tool.

8. Description of Components

(Refer to page 1 for photos of individual model components)

A. Prefilters - Heavy-duty, reusable, aluminum mesh, industrial service filters aid in air distribution and mechanically remove large particles not suitable for precipitation. Filters are interchangeable with afterfilters.

B. Mist-Stop Filters (optional) - 2” (58mm) aluminum mesh or coalescing type filters for use on applications with coolant mist. Filters mechanically remove oil droplet/coolant mist from air stream. This allows the ESP filter to operate for longer intervals between servicing.
The Mist-Stop filters are washable.

C. Ionizing Sections - Ionizing sections are independent of collection cells for ease of maintenance. The frame, of rugged aluminum construction, supports tungsten steel ionizing wires. Each wire is spring mounted and easily replaced in the field. The springs, wire support bars and ceramic standoff insulators are located out of the airstream, behind a three-sided aluminum extrusion with an airfoil design, to further limit insulator contamination. An extremely dense ionizing field and integral bypass prevention baffles assure ionization of all particles entering the precipitator.

D. Collection Cells - Parallel plate collection components are of aluminum construction.
Triangular insulators, which afford a longer path to ground, are located completely out of the dirty airstream. This arrangement maintains nominal operating voltages longer, thus reducing the frequency of cleaning. The insulators, along with the cell’s long plate design, assure maximum efficiency and retention of collected contaminant.

E. Afterfilters - Heavy-duty, reusable, industrial aluminum mesh filters aid even air distribution across the cells and trap any collected contaminant that could release from the cells during start and stop operations.

F. Power Supply - The proprietary design high-voltage power supply is current limited to protect both the power supply and components in a dead short condition. Power consumption is 75 watts maximum. The power supply is located in an external electrical box.

G. Push-to-Test Buttons - An exclusive Parker feature, these buttons verify electrical continuity during equipment operation without the use of a meter. They are also a convenient means to ground any residual charge in components before removing them from a deactivated unit. Refer to Figure 14.

H. Blower - A belt-driven, low speed, centrifugal-type blower with sealed ball bearings is shock-mounted to the cabinet to reduce noise and vibration.

I. Drive - Motors are continuous-duty, totally enclosed, and fastened to adjustable motor mounts. The motor is equipped with a variable speed motor pulley allowing on-site blower speed adjustment.

J. Discharge Grill - Four-way-direction, individually adjustable deflectors permit adjustment of cleaned air distribution for specific application requirements.

K. Cabinet - This 16-gauge steel housing is of wraparound construction with all seams welded. The cabinet is prepared in a phosphatized wash cycle. The finish coat is an electrostatically-applied powder paint, baked to ensure a durable hard finish. The electrostatic compartment features bypass baffles on the door and rear wall to guide the contaminated airstream through the components.

L. Component Access Door - Doors are hinged for easy access and interlocked to shut down high voltage when opened.

M. Access Door (Drive Set) - A separate hinged door allows access to motor and blower for easy adjustment (Refer to Figure 3).

THE FOLLOWING SECTIONS ARE FOR THE USE OF TRAINED PERSONNEL ONLY

⚠ CAUTION

Hazardous live and moving parts are exposed during the following procedures. Switch off/ isolate the electrical supply to the Smog-Hog Air Cleaning System before servicing.

⚠ CAUTION

Risk of electrical shock. A residual DC voltage will remain on high voltage components for a short time after power is removed. Prior to handling, ground components using an insulated screwdriver, refer to Figures 4 and 5.

⚠ NOTICE

Cleaning and servicing should only be done by qualified and trained personnel. Some collected contaminants may be hazardous. Consult factory or local safety personnel before servicing unit and for proper disposal of collected contaminants.

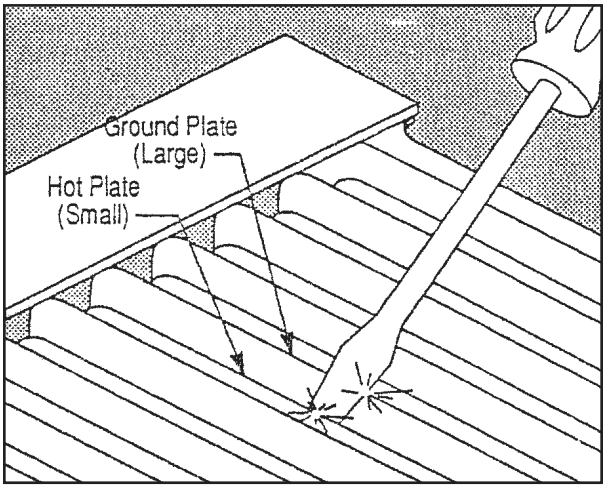

Figure 4

Grounding the Collection Cell

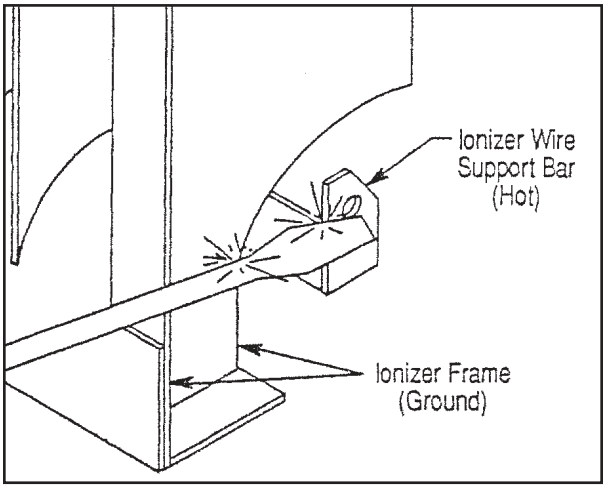

Figure 5

Grounding the Ionizer

9. Maintenance

Normal maintenance is confined to periodic cleaning of the ionizer, cell and filters, including checking the drive belt tension.

A. Cleaning Instructions

Ground the collection cell and ionizer by turning off unit and depressing both push-to-test buttons. This will remove any residual charge from components and open component access door.

Remove the dirty collection components (prefilter, ionizer, cell, and afterfilter) from cabinet.

While there are many methods of cleaning, certain key cleaning criteria contribute to the effectiveness of every method. These include the type of detergent, detergent strength, water temperature, agitation/ impingement, duration, rinse procedure and dry-out time.

Type of Detergent. In general, the detergent used on most applications will be alkaline in nature. It is extremely important that the detergent have a built-in buffering agent to prevent deterioration to the aluminum. Detergents are available through Parker Hannifin for specific applications and contaminants.

Detergent Strength. Detergent concentration, or "strength," in a mixture with water varies with the application from 1:1 to 5:1 to even 20:1 parts water to parts detergent, refer to detergent manufacturer's directions. More or less detergent may eventually be required for effective cleaning at reasonable detergent cost. Typically, 20:1 is recommended as a starting point. Experimentation is recommended.

⚠ CAUTION

Never mix acid and alkaline detergent for manual cleaning. Detergent mixing could cause rapid heat release, gel formation or other undesirable conditions.

Water Temperature. Detergents can be up to twice as effective in hot water and hot water alone is very effective in softening built-up residue. Water temperature should be 130°F (54°C) to 150°F (66°C), not to exceed 160°F (71°C).

Agitation/Impingement. These methods are virtually the same, with impingement being the most extreme form of agitation. Any liquid movement over built-up residue will dissolve some of the contaminant, allowing detergent to work on the next layer. A reduction in cleaning time duration usually results.

Cleaning Cycle Duration. In most cleaning methods, adequate time should be allowed for the detergent to dissolve the contaminant thoroughly. Reaction time will vary depending on detergent strength, temperature and agitation. Guidelines for mixing, heating and expected results are included on detergent specification sheets.

Rinse Procedure. Cleaned components should be rinsed off quickly and thoroughly to remove any remaining contaminants. Even if the components appear to be clean, some detergent residue may remain. This should be removed because the residue may contribute to voltage bleed-down when the components are placed in service. Also, even though the detergent is "buffered" (i.e., treated to prevent deterioration of the aluminum), prolonged contact with the components could cause minor corrosion. As with cleaning, hot water should be used for rinsing.

Dry-Out Time. Collection components should be dry before the system is placed into operation. Start-up of a wet system causes dead shorts and/or arcing conditions. Wet ionizers, collector cells and mesh filters should be placed in a warm room until they are dry. Techniques such as hand wiping insulators and blowing dry with compressed air will shorten drying time.

B. Component Cleaning Methods

The manual cleaning method selected will depend on the type of contaminant, rate of deposit, facility limitations such as cleaning time windows (process down time) and available utilities. The following three acceptable cleaning methods may be included in such a plan.

Hot Detergent Soak Tank. This method involves placing components in an agitated solution of hot water and detergent, and is the most effective method. This procedure will remove most contaminants collected in the SHN unit with proper detergent selection.

Components should not be placed in highly concentrated detergent solutions or allowed to soak for extended periods (e.g., overnight), especially at elevated temperatures. Extended soaking (e.g., days) in solvent or detergent solution will degrade components over time and should be avoided.

Automatic Parts Washers. Certain commercially-available units combine and automate the features necessary for effective cleaning, including water heating, detergent injection, agitation, rinsing and drying.

Portable Pressure Washer. A self-contained pressure washer with a spray wand can be an effective cleaning method, providing it is used with caution. Care should be taken not to expose collection cell plates to close-up and prolonged blasts of high temperature or high pressure water. Cell plates deform under continuous exposure to such conditions.

C. Other Cleaning Considerations

The previous methods address the cleaning of Smog-Hog components only. The cabinetry should also be periodically cleaned (e.g., during normal planned maintenance downtimes). Each time manual maintenance is performed, the cabinet high voltage feed-thru insulators should be thoroughly cleaned. Voltage output of the power packs should also be checked when maintenance is performed.

Parker and/or our local representatives can provide assistance in choosing the best method for cleaning Smog-Hog components in your application.

D. When are Components Clean?

Collection components should have a clean, not necessarily “new,” aluminum appearance after cleaning. Discoloration will not affect system efficiency. The following is a checklist for acceptable components:

Ionizer

1. Aluminum frame and plates are free of contaminant buildup.
2. Ceramic standoff insulators are clean and white (no residual coating). Cracked or carbon-tracked insulators (black streaking) have been replaced.
3. Wire and springs intact and taut, centered between plates and free of contaminant build-up.
4. Contact springs and contact screws are properly aligned (contact springs not deformed).
5. Bent or broken parts have been repaired or replaced.

Collecting Cell

1. Aluminum frame is square, plates are parallel and hot plates are centered between ground plates.
2. Residual particulate has been removed between plates and at corner supports. Material bridging across plates has been removed.
3. Triangular insulators front and rear side are free of contaminant. Cells with carbon-tracked insulators (black streaking) have been replaced.
4. Contact springs and contact screws are properly aligned (contact springs not deformed).
5. Bent or broken parts have been repaired or replaced.

Prefilters/Afterfilters

1. Aluminum media and frame are free of contaminant.
2. Frame is square and media is intact.
3. Filters are always installed with drain holes down and arrow on their frames in the direction of airflow.

Cabinet

1. Ceramic feed-thru insulators are clean and white.
2. Door gaskets (where applicable) are clean and intact.
3. Component tracks are free of contaminant (for component grounding).
4. Module sumps and bottom drains are clean and free-flowing.
5. Walls, ceiling and doors are free of heavy buildup.
6. Blower has been checked for heavy buildup, clean if required. Blower housing drain is open (when provided).
7. If so equipped, preconditioning accessories (vee-bank filters, cooling coils, etc.) have been checked for excessive pressure drop, clean if required.

10. Periodic Maintenance and Adjustment

A. Replacement of Door Gaskets

Should leakage occur, an adjustment of the latch pawls (by bending) on the back of the door handles may solve the problem. However, extreme care should be exercised in compressing the door gasket beyond its design limits. Before adjusting for gasket deflection, check for the following:

- Door or cabinet damage.
- Deformed or torn gasket.
- Leakage from some other source.

Collection components should be removed and replaced with great care to preserve gasket integrity. Should damaged gasket require replacement, order 7 ft. (2134mm) of gasket part number 42-0168 (BUNA-N) for each door.

TO CHANGE GASKET:
(Refer to Figures 6 & 7)

1. Remove existing gasket, making sure to scrape off any residual silicone sealant.
2. Trim one edge of gasket neatly and evenly.
3. The door gasket internally has three lips to one side of the gasket and one lip to the other side. The door gasket should be installed with the three lips towards the interior of the cabinet.
4. The door gasket should be formed to the complete cabinet lip edge before applying silicone sealant. Place the trim edge at the top center of the cabinet lip edge and press gasket in place, ending at the same location. Do not trim excess.
5. Remove door gasket and apply silicone sealant to the inside of gasket or on the inside edge of the cabinet lip edge. Place the trim edge at the top center of the cabinet lip edge and press gasket in place, ending at the same location.
   Remove excess silicone sealant and trim gasket. Make sure the gasket is firmly bottomed on the lip edge by tapping with a rubber mallet or the gasket may not seal against the door properly.
6. Check that the distance from the inner face of the access door to the latch tongue measures 7/8" (22mm). Slight adjustments may be necessary due to sheet metal variations.

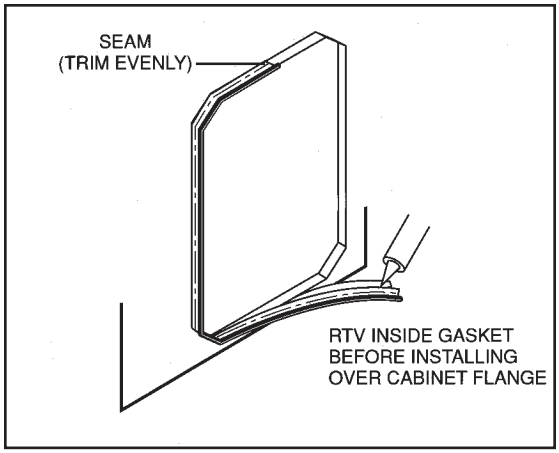

Figure 6

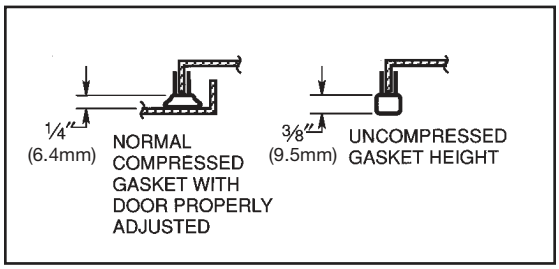

Figure 7

B. Replacement of Ionizer Wire

- Remove the damaged wire from each spring. Replace spring if damaged.
- Loop one end of the new wire over the bottom spring then extend the top spring and loop the end of the wire over the spring (see Figures 8 & 9). Pliers may aid this operation.
- Release the spring gently. The wire is now taut and automatically centered.

Note: In the event that replacement wires are not available, the ionizer may remain in service. Remove the broken wire(s) and springs from assembly until replacement is available.

C. Airflow Adjustment

The motor is equipped with a variable pitch pulley to allow for minor adjustments in cubic feet per minute (CFM) of airflow.

Increasing blower speed (RPM) will increase airflow (CFM) and current (amps). To increase speed, close the variable pitch pulley from "Normal Setting" (Fig. 11A) toward "Fully Closed" (Fig. 11B). Decreasing blower speed will decrease airflow and current.
To decrease speed, open the variable pitch pulley from "Normal Setting" (Fig. 11A) toward "Fully Open" Fig. 11C).

To adjust the variable pitch pulley:

1. Loosen motor base nuts, adjust motor slide base and remove the drive belt.
2. Loosen set screw "A" to clear the drive key between pulley halves.
3. Remove the key.
4. Adjust pulley in increments of one turn to the desired setting.
5. Install key and tighten set screw "A."
6. Install drive belt.
7. Loosen set screw "B."
8. Align belt centerlines of motor and blower pulleys using straight edge and square.
9. Set belt tension using a belt tension gage.

⚠ CAUTION

Improper blower speeds adversely affect system performance

Contact Parker before adjusting motor variable pulley settings.

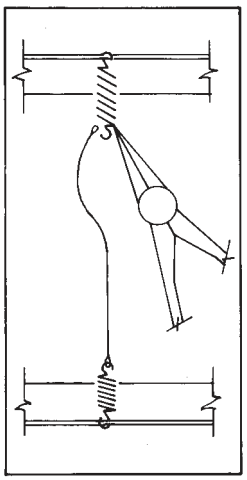

Figure 8
Attaching New Ionizer Wire

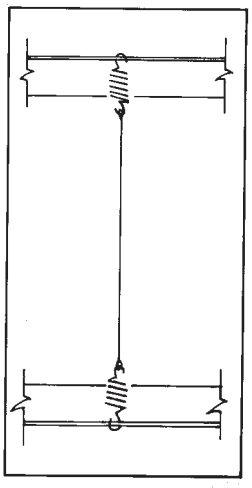

Figure 8
Attaching New Ionizer Wire

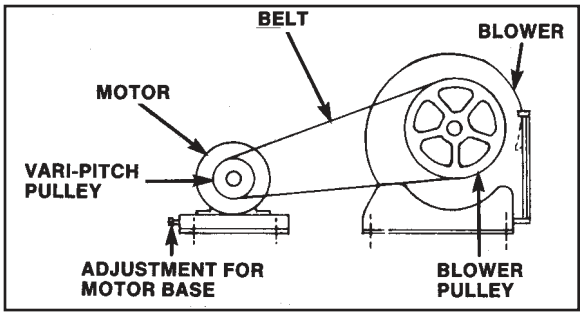

Figure 10
Motor/Blower Schematic

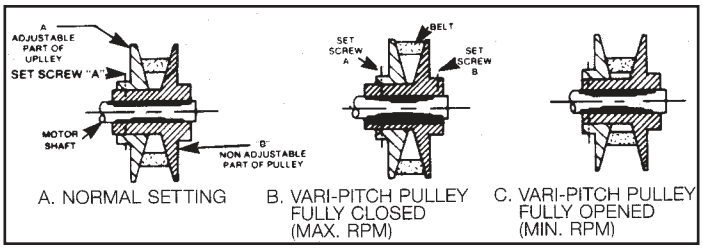

Figure 11
Motor Pulley Settings

11. Troubleshooting

Tools Required:

- Screwdriver 8” (200mm) or longer with plastic handle
- Volt-Ohm-Meter — used to check low voltage input (115 VAC) and continuity (OHMS)
- High Voltage Probe (optional) — used to check high voltage power supply. Range: from 0 to 15 KVDC

⚠ CAUTION

Risk of electrical shock. The high voltage circuits to the ionizer and collector should be grounded before removing/installing high voltage wires and/or removing the ionizer(s)/collector cell(s). Grounding can be accomplished by waiting one minute after placing power in the off position or refer to Figures 4 and 5. The power pack total current output is limited to a maximum of 5 milliamps to ensure personnel safety.

⚠ WARNING

The SHN Series is equipped with an external limit switch (120 VAC to the power packs) engaging and disengaging by the component access door. The limit switch should be engaged manually after placing the power in the on position to the SHN unit, and disengaged when placing power in the off position during the troubleshooting steps. The engagement and disengagement of the limit switch is not identified in the troubleshooting steps.

⚠ WARNING

Power pack enclosures service voltage can range from 120VAC to 460VAC. When servicing the power pack enclosure, place power in the off position by the disconnect switch supplied by others.

Troubleshooting Procedures

High voltage issues can generally be isolated by referring to the indicator light.

- When the light illuminates, high voltage is present from the power pack to the ionizer and collector cell circuits.
- A flashing indicator light indicates a failure in the high voltage circuits.

There are four conditions which may cause a flashing indicator light.

a) The high voltages are below specifications to the ionizer and/or the collector cell circuit(s).
b) There is an arcing condition to the ionizer and or collector cell circuit(s).
c) There is a dead short condition.
d) The power pack has failed.

A high voltage probe is required to measure high voltages to the ionizer and collector circuits to the unit, as well as to perform the “Bench Test Procedure” (Section 12). As an accessory, a high voltage probe can be purchased for a multimeter.

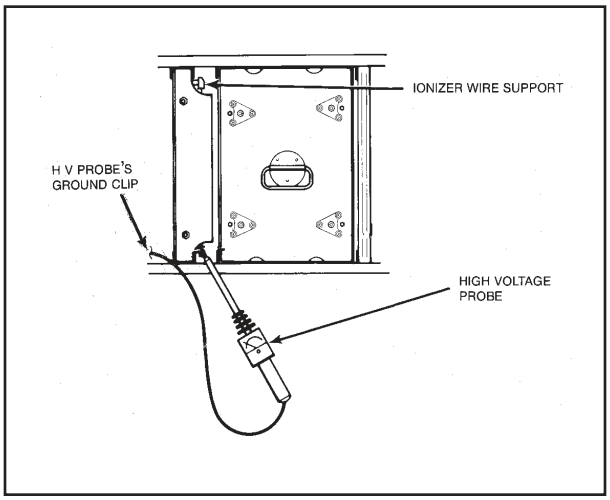

Figure 12
Checking Ionizer Voltage

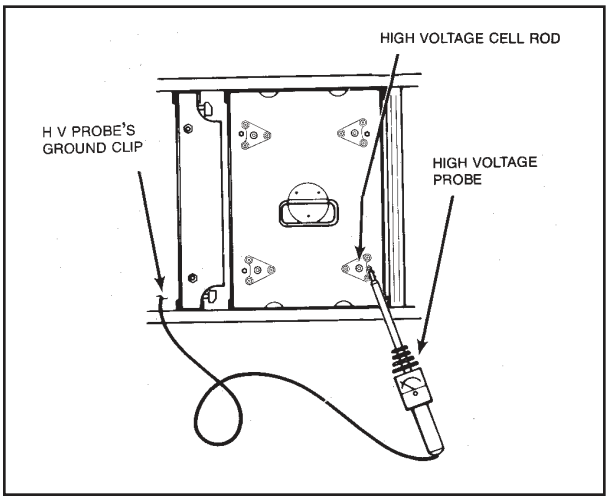

Figure 13
Checking Cell Voltage

High Voltage Specifications:
Ionizer Circuit Operating Range: 10.0 to 11.8 KVDC
Collector Cell Circuit Operating Range: 5.0 to 7.5 KVDC

There are two factors which will elevate ionizer voltages above 12.0 KVDC:

- The ionizer wires are heavily coated with contaminant (two to three times or greater the diameter of the wire). This will decrease collection efficiency.
- There are "run away" voltages to the power pack requiring power pack replacement, above 12.0 KVDC to the ionizer circuit, and 7.6 KVDC to the collector cell circuit.

There will be continuous cell arcing if cell voltages exceed 7.5 KVDC. This is also caused by "run away" voltages to the power pack requiring power pack replacement. A high voltage measurement can be performed by removing both the high voltage wires from the power pack to determine high voltage output. The high voltage measurement should not exceed "High Voltage Specifications."

If there is a dead short condition or arcing, the problem is typically within the collector cell. Follow Step 1 below to ensure power pack is operational. Install all ionizers and collector cells within the unit with proper electrical alignment before proceeding with Troubleshooting Steps below. Refer to Figure 14.

Step 1 and 2 do not require a high voltage probe.

STEP 1
Check the Power Pack

The power should be placed in the off position to the power pack. Carefully disconnect both high voltage wires (Ionizer #8 and Collector #7) from the power pack. The high voltage wires should carefully be placed away from the ionizer and collector cell power pack connectors, eliminating the high voltage wires from contacting the power pack connectors. Place the power to the unit in the on position; the indicator light should be illuminated.

- If the indicator light is illuminated, the power pack is operational. Proceed to Step 2.
- If the indicator light is flashing (high voltage wires #8 and #7 disconnected from the power pack), the power pack should be replaced.

- If the indicator light is not illuminated, verify there is 120 VAC to the power pack. Place power in the off position to the unit, and remove the 120 VAC wires from the power pack. Connect a meter to the two 120 VAC wires and place the power in the on position. If 120 VAC is not present, there are problems upstream from the power pack, complete the following until the problem is corrected:
  - The electrical disconnect should be in the “on” position.
  - Ensure the limit switch is mechanically engaged to the component access door.
  - Check limit switch failure (120 VAC) to the power pack circuit. (Measure VAC before the limit switch and engage limit switch measuring voltage after the limit switch). The mechanical engagement of the limit switch should be checked by closing the component access door.
  - Check for blown fuses to the main disconnect.
  - Check if fuses are failed to the primary and or secondary side of the step down transformer (if equipped).
  - Check for loose wire terminal screws or disconnected wires at the terminal blocks.
  - Check for indicator light failure. Check wire connections (#9 and #2) to the power pack, and to the indicator light. The indicator light is an LED which requires correct wiring polarity since the power pack output is DC voltage. The LED will not illuminate if the wiring polarity is incorrect. The power pack has two wires to the indicator light, wire #9 (+), wire #2 (-). The power pack terminals are identified with the identical numbers. LED assembly is with two wires, wire #9 (+) to the red wire, wire #2 (-) to the black wire. VDC measurement with wires #9 and #2 (to the indicator light) disconnected: 7.9 to 10, with wires #9 and #2 connected 3.8 to 6.0.
- Place power in the off position and connect all wires which have been disconnected before proceeding to the next section.
- Parts should be replaced as required.

STEP 2

Check Collecter Cell(s) and Ionizer(s)

A flashing indicator light is associated with arcing or high voltage below specifications. If the sound of arcing is not evident, high voltages are below specifications. The ionizer(s) and collector cell(s) should be manually cleaned if the high voltages are below specifications. Refer to Step 3 for measuring high voltages.

The following steps are a process of elimination in identifying the problems to the ionizer/collector cell circuits. The power pack connectors are identified as “Ionizer #8” and “Collector #7.” All connectors on the power pack are identified with name and wire number, with the exception of the ground connector (green wire to this connection). The wires within the power pack enclosure are identified with numbers.

(a) Disconnect high voltage wire #8 “Ionizer from the power pack with high voltage wire #7 connected to the power pack. Place power in the on position.

Is the indicator light illuminated? If so, the cell circuit/components are operational proceed to step (b). If the indicator light is flashing, perform the following. Place power in the off position and remove the cells components. Place power in the on position, is the indicator light illuminated? If the indicator light is illuminated, the problem is within the collector cell. If the indicator light is flashing, the problem is the high voltage feed through insulator (dirty, cracked, carbon tracked) and/or the high voltage wire (wire insulation has deteriorated).

If the indicator light is flashing with the cells components installed, perform the following:

Remove the collector cells and inspect for the following conditions.

COLLECTOR CELL PROBLEMS WHICH COULD CAUSE A FLASHING INDICATOR LIGHT

Sometimes removing the collector cell(s) and installing the collector cell(s) into the unit will clear a flashing indicator light condition. If not, check the causes below:

- Dirty collector cell(s) (contaminant build up) requiring manual cleaning.
- "Wet" collector cell(s) not properly dried after a wash cycle or manual cleaning procedure. Use compressed air to accelerate the drying time.
- Deformed collector cell contact springs contacting a "grounded surface," including cabinet high voltage feed through insulator contact spring.
- Bent cell plate(s) in close proximity to the opposing cell plate(s).
- Misaligned contact springs between the collector cells and/or the high voltage feed through insulator.
- Warped cell plates due to:
  - Improper handling
  - High temperature process airstream and/ or
  - High temperature hot water utilized for washing the components (above 180°F (82°C) for both conditions)

  Parts should be replaced as required.

The Bench Test Procedure (Section 12) will determine which components are causing a flashing indicator light.

(b) Indicator light is illuminated with the high voltage wire #7 connected to the collector cell connector on the power pack. Place power in the off position and connect high voltage wire #8 to the ionizer connector on the power pack and place power to the on position.

Is the indicator light illuminated? If so, the ionizer circuit/components are operational. If not:

- Place power in the off position and remove ionizer components.
- Place power in the on position.
- Is the indicator light illuminated or flashing?
- If illuminated, the problem is within the ionizer(s).
- If the light is flashing, the problem is the high voltage feed through insulator (dirty, cracked, carbon tracking), and/or the high voltage wire (wire insulation has deteriorated causing a dead short condition).

The indicator light is flashing with the ionizers components installed, perform the following:

IONIZER PROBLEMS WHICH COULD CAUSE A FLASHING INDICATOR LIGHT

Sometimes removing the ionizer(s) and installing ionizer(s) back into the unit will clear a flashing light condition. If indicator light is still flashing, check possible causes below:

- Dirty ionizer(s) (contaminant build up) requiring manual cleaning.
- "Wet" ionizer(s), not properly dried after a wash cycle or manual cleaning procedure. Use compressed air to accelerate drying time.
- Deformed ionizer contact springs in close proximity to a "grounded surface."
- Misaligned contact springs between the ionizers, or at the high voltage feed through insulator.
- Cabinet high voltage feed through insulator contact spring misaligned with the ionizer.
- Broken ionizer wires
- Contaminant build, cracked, carbon tracking stand off insulators.

- Carbon tracking (black streak) to the ionizer stand off insulators and or high voltage feed through insulator (replace insulator)
- Ionizer wires not “taut.”
- Bent ionizer wire support bar in close proximity to a “grounded surface.”
- Bent ground plates in close proximity to the ionizer wires.

Parts should be replaced as required and connect all wires.

The Bench Test Procedure (Section 12) will determine which components are causing a flashing indicator light.

STEP 3
Checking High Voltage Probe Measurements

⚠ CAUTION

The unit blower is on line during Step 3 with the component access door open.
The component access door could close suddenly due to the airflow from the unit blower.

A high voltage probe (Refer to manufacturer’s instructions) is required to measure high voltage output from the power pack. (See Figures 12 and 13.) If the indicator light is flashing or not illuminated, perform Step 1 and 2.

Place power on to the unit.

Open the component access door and connect the ground wire from the high voltage probe to the bare metal surface.

Engage the limit switch and place the tip of the high voltage probe as illustrated to Figures 12 and 13. The high voltage measurement should be 10.0 to 11.8 KVDC to the ionizer circuit and 5.0 to 7.5 KVDC to the collector cell circuit. If the high voltages are below specifications, refer to step 2, “Ionizer Problems” and/or “Collector Cell Problems,” Bench Testing may also be required. Low ionizer voltage will decrease the collector cell voltage but low cell voltage will not affect the ionizer voltage.

The high voltage probe can be used to determine which circuit is arcing or a dead short condition by isolating each circuit ionizer or collector cell.

Disconnect high voltage wire #7 (collector cell) and measured high voltage to the ionizer circuit (high voltage wire #8), refer to Figure 12.

Connect high voltage wire #7 and disconnect high voltage wire # 8.

Measure high voltage to the collector cell circuit (high voltage wire #7), refer to Figure 13.

Fluctuating high voltage during a measurement will indicate an arcing circuit.

12. Bench Test Procedure

Tools Required

- One power pack
- Two high voltage wires, 6 ft. (1829mm) in length, with test clips at each end of the wire
- High voltage probe (Refer to operating instructions by the manufacturer). If a high voltage probe is not available, install a Parker indicator light (Part No. 02-10561-G) to power pack terminals (+) 9 and (-) 2. Red wire to power pack terminal (+) 9 and black wire to terminal (-) 2.
- AC cable with three prone plug (for wall receptacle). Opposing end of cable should have two connectors for the power pack “L” and “N.” There should be a test clip for the ground wire. The ground wire should be secured to the ground stud of the power pack.

High Voltage Specifications:
Ionizer Circuit Operating Range: 10.0 to 11.8 KVDC
Collector Cell Operating Range: 5.0 to 7.5 KVDC

A multimeter with the high voltage accessory should be used for accurate high voltage measurements. (Follow the manufacturer's instructions.) The ground wire from the high voltage probe should be grounded to a bare metal surface.

Do not use a power pack that is not within the high voltage specifications. Refer to "Testing the Power Pack" (Section 11).

Procedure

Testing the Ionizer

1. Select one ionizer to be tested.
2. Connect one high voltage wire to the ionizer contact spring and the other end to the power pack connector identified as "Ionizer #8."
3. Connect the other high voltage wire (use as a ground wire) to the metal frame of the ionizer and the other end to the ground stud on the power pack.
4. AC cable should be connected to the power pack with ground wire secured to the ground stud on the power pack.
5. Connect AC cable plug to the wall outlet.
6. Measure high voltage with the high voltage probe, ionizer voltage should be 10.0 to 11.8 KVDC, not to exceed 12.0 KVDC. If ionizer voltage exceeds 12.0 KVDC, the ionizer wires are moderately to extremely coated with contaminant (clean ionizer wires), or the power pack is not within specifications. There is a high problem if the indicator light is flashing.
7. If there is an arcing condition, determine the problem and repair.
8. Disconnect AC cable plug from the wall outlet.

IONIZER PROBLEMS WHICH COULD CAUSE A DEAD SHORT CONDITION/ARCING CONDITIONS (BLINKING INDICATOR LIGHT) Refer to step 2.

Testing the Collector Cell

1. Select one collector cell to be tested.
2. Connect one high voltage wire to the collector cell contact spring and the other end to the power pack connector identified as "Collector #7."
3. Connect the other high voltage wire (use as a ground wire) to the metal frame of the collector cell and the other end to the ground stud on the power pack.
4. AC cable should be connected to the power pack connectors with ground wire secured to the ground stud on the power pack.
5. Connect AC cable plug to the wall outlet.
6. Measure high voltage with the high voltage probe, collector cell voltage should be 5.0 to 7.5 KVDC, not to exceed 7.5 KVDC. The collector cell will not maintain high voltages above 7.5 KVDC.
   The collector cell will continuously arc. Usually this condition is caused by a power pack above the "High Voltage Specifications." The power pack should be replaced. There is a high voltage problem if the indicator light is flashing.
7. If there is an arcing condition, determine the problem and repair.
8. Disconnect AC cable plug from the wall outlet.

COLLECTOR CELL PROBLEMS WHICH COULD CAUSE A DEAD SHORT/ARCING CONDITIONS (FLASHING INDICATOR LIGHT). Refer to step 2.

Testing the Power Pack

1. Connect AC cable to the power pack connectors with the ground wire secured to the ground stud on the power pack.
2. Connect AC cable plug to wall outlet.
3. Measure high voltage with high voltage probe at the connectors “Ionizer #8” and “Collector #7,” refer to high voltage specifications, section 11. The power pack has failed if the indicator light is flashing.
4. Disconnect AC cable plug from the wall outlet.
5. Replace power pack if high voltage measurements are above or below high voltage specifications.

13. Replacement Parts

To order replacement parts, refer to “Smog-Hog Parts List” on page 24. Order through your local Parker representative or contact Parker Hannifin at 1-800-343-4048. Please have the unit model number, serial number (from component access door) and part numbers available when ordering.

Properly Aligned SHN Assembly

Item No.	Part No.	Description	Qty. Required
1	02-2339-S	Collection Cell Assembly	2
2	02-0037-S	Ionizer Assembly	2
3	37-0027	COLLECTION CELL FEED THRU INSULATOR	1
4	37-0026	IONIZER FEED THRU INSULATOR	1
5	36-0014	CELL/IONIZER INSULATOR SPRING	2
6	36-0077	GROUND SPRING	4
7	30-0387	COLLECTION CELL CONTACT SCREW	3
8	30-0389	IONIZER CONTACT NUT	3
9	30-0388	IONIZER CONTACT SCREW	3
10	30-0388	IONIZER CONTACT SCREW	1
11	42-0082	COLLECTION CELL CONTACT SPRING	2

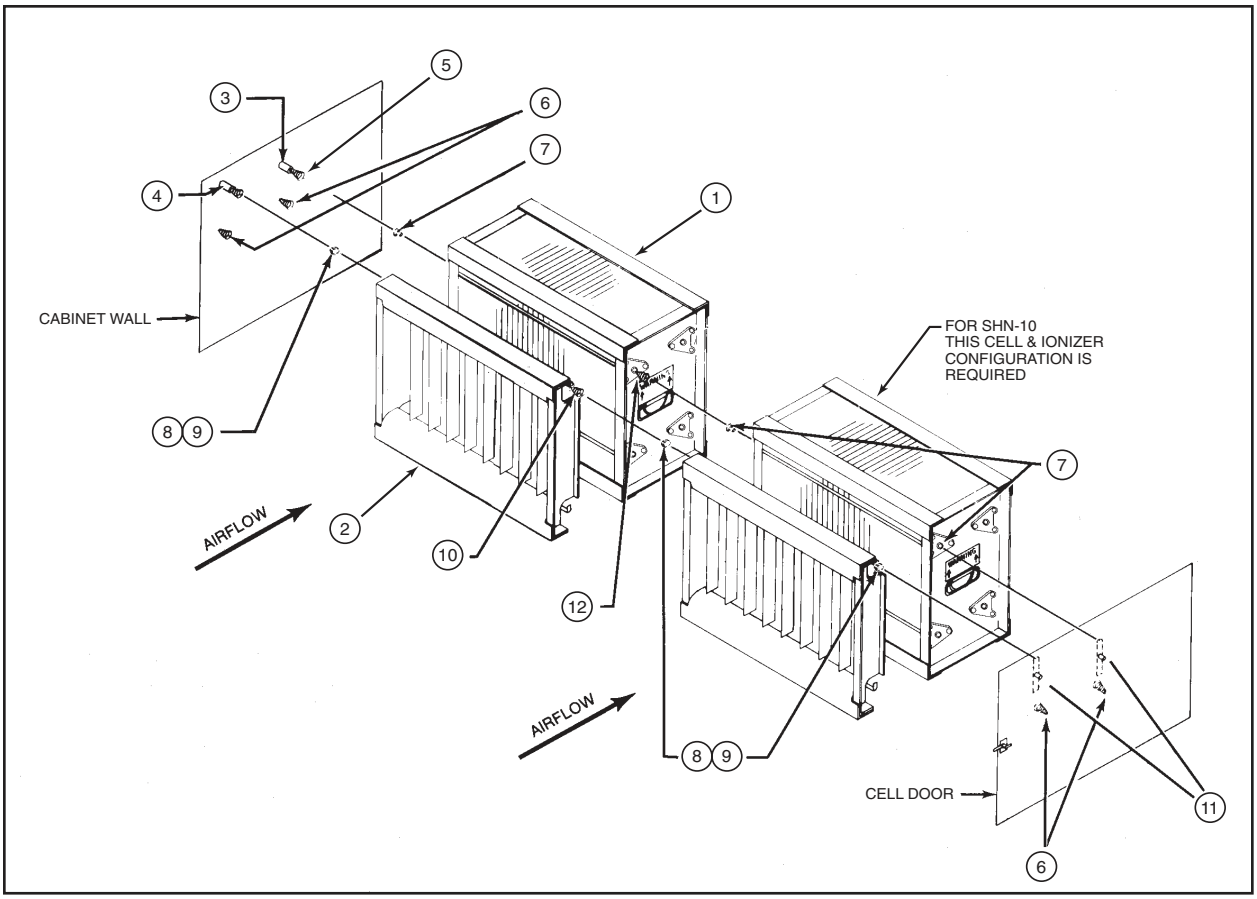

Figure 14
Properly Aligned SHN Assembly

SMOG-HOG Parts List

COMPONENT DESCRIPTION	Part No.
POWER SUPPLY - POSITIVE (UL RECOGNIZED)	21-1216D
POWER SUPPLY - NEGATIVE (UL RECOGNIZED)	21-1220
GREEN 12 VDC LED TYPE INDICATOR LIGHT W/ TERMINALS	02-10561-G
100 V.A. STEP-DOWN TRANSFORMER (FOR SHN-10 & SHN-20)	
(208V to 115V)	21-1275-100
(230V or 460V to 115V)	21-1274-100
(575V to 115V)	21-1276-100
150 V.A. STEP-DOWN TRANSFORMER (FOR SHN-10-M, SHN-20-M, SHN-40 & SHN-50-T)	
(208V to 115V)	21-1275-150
(230V or 460V to 115V)	21-1274-150
(575V to 115V)	21-1276-150
350 V.A. STEP-DOWN TRANSFORMER (FOR SHN-40-M)	
(208V to 115V)	21-1275-350
(230V or 460V to 115V)	21-1274-350
(575V to 115V)	21-1276-350
LIMIT SWITCH, CABINET DOOR INTERLOCK	20-0005
GASKET, EDGE (BUNA-N)	42-0168
BLOWER-BELT DRIVE 3/4” SGL 9-7 – SHN-10	32-0059
BLOWER-BELT DRIVE 3/4” DBL 9-7 – SHN-20	32-0036
BLOWER-BELT DRIVE 1” SGL 15-15 – SHN-40 & 50-T	32-0063
MOTOR-7-1/2HP, 208-230-460/3/60	22-0288
MOTOR-5HP, 208-230-460/3/60	22-0023
MOTOR-3HP, 190-208-230-460/3/50-60	22-0022
MOTOR-1HP, 208/3/60	22-0012
MOTOR-2HP, 208-230-460/3/60	22-0039
MOTOR-1/2HP, 115-230/1/60	22-0001
MOTOR-1/2HP, 190-208-230-460/3/60	22-0002
MOTOR-1HP, 575/3/60	22-0047
BELTS	BASED ON ORDER
PULLEYS	BASED ON ORDER
COLLECTION CELL GPN	02-2339-S
IONIZER ASSY-9 WIRE	02-0037-S
OPTIONAL MIST-STOP FILTERS	
FILTER, COALESCING TYPE, 2” SHN-10	33-10071-0001
FILTER, COALESCING TYPE, 2” SHN-20, 40 & 50*	33-10071-0002
FILTER, ALUMINUM MESH, 2” SHN-10	33-10072-0001
FILTER, ALUMINUM MESH, 2” SHN-20, 40 & 50*	33-10072-0002
*Note: (1) filter per SHN-20 (2) Filter per SHN-40 & 50	

APPENDIX A

Airflow Curves

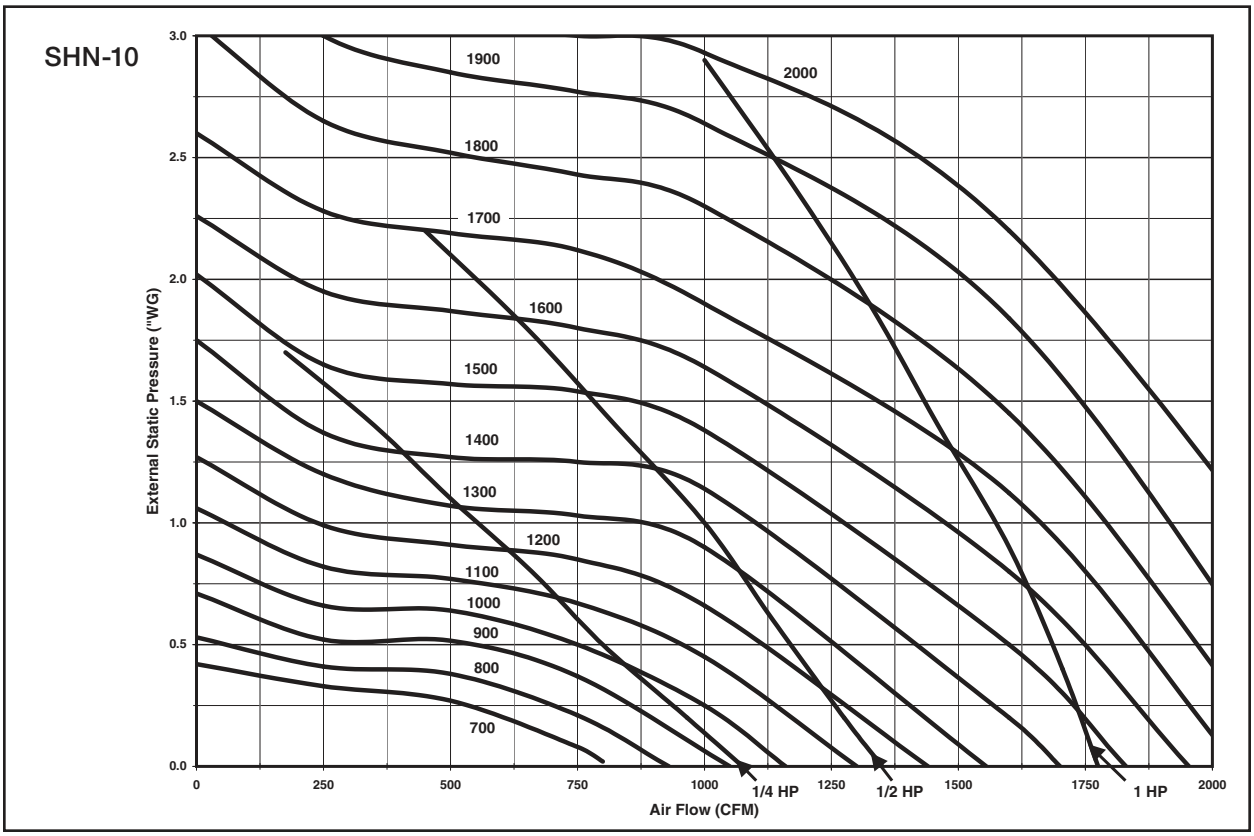

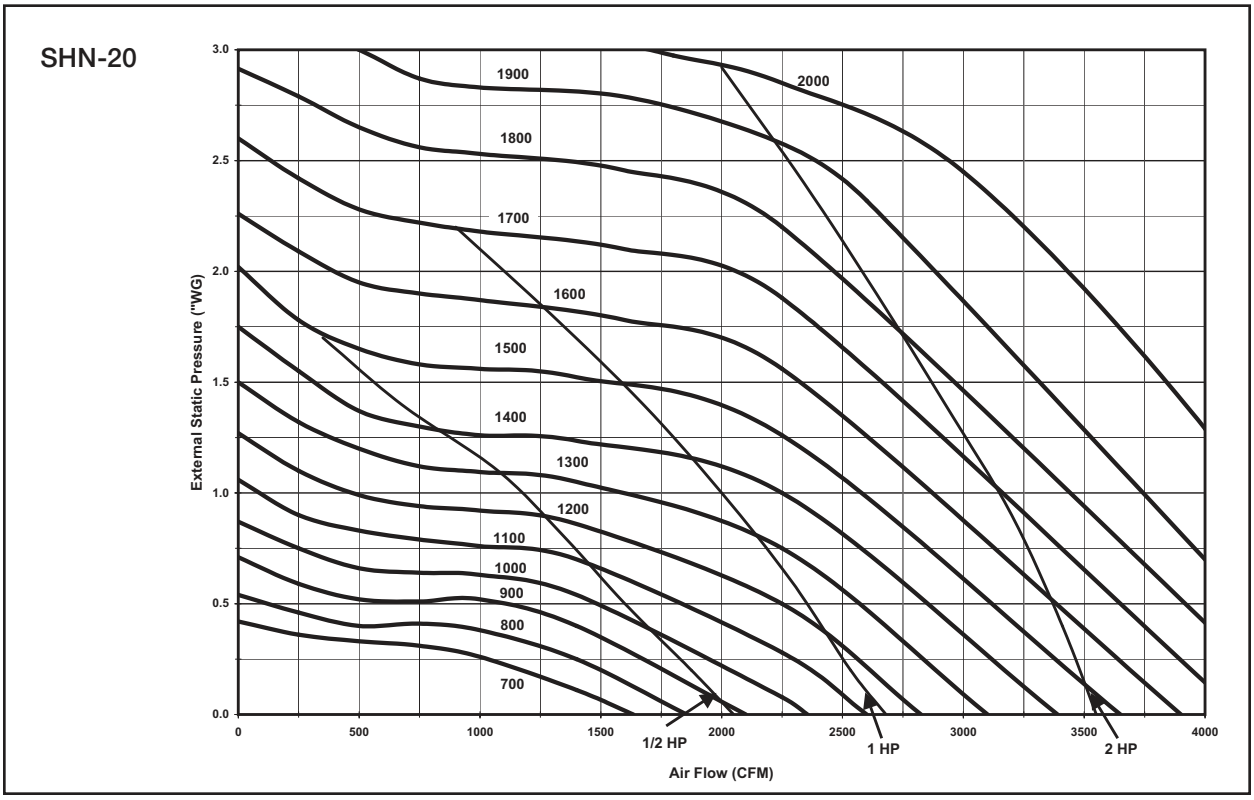

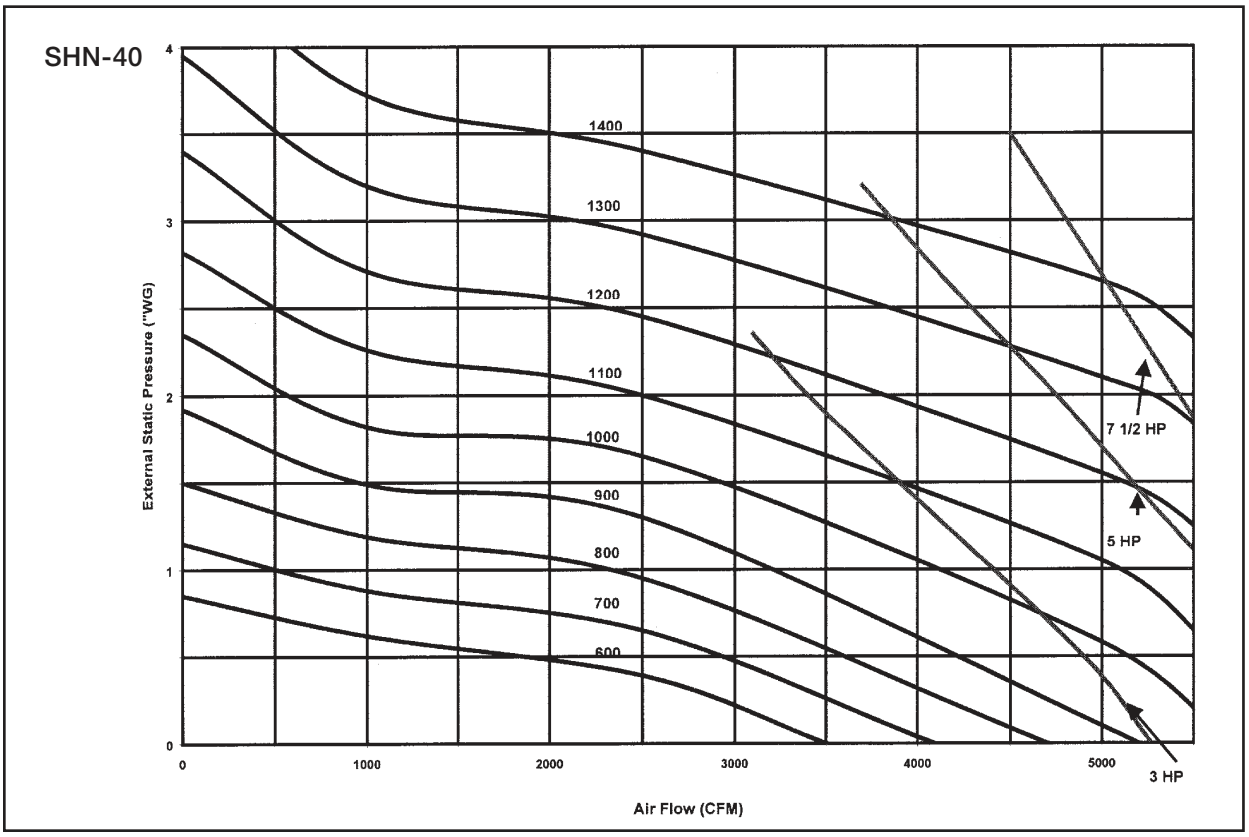
SHN-40
External Static Pressure ("WG)
Air Flow (CFM)
0
1
2
3
4
0
1000
2000
3000
4000
5000
1400
1300
1200
1100
1000
900
800
700
600
7 1/2 HP
5 HP
3 HP

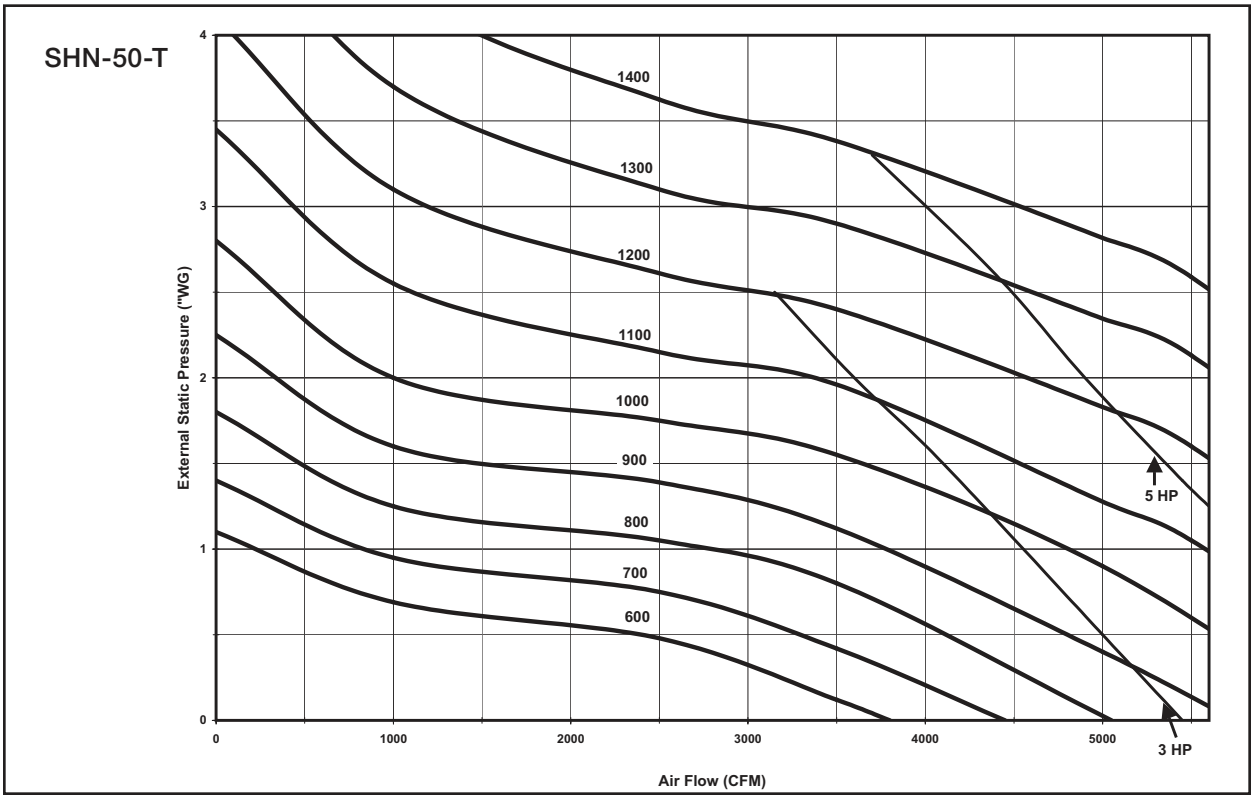
SHN-50-T
External Static Pressure ("WG)
Air Flow (CFM)
0
1
2
3
4
0
1000
2000
3000
4000
5000
1400
1300
1200
1100
1000
900
800
700
600
5 HP
3 HP

APPENDIX B

Wiring Diagrams

SHN-10/20

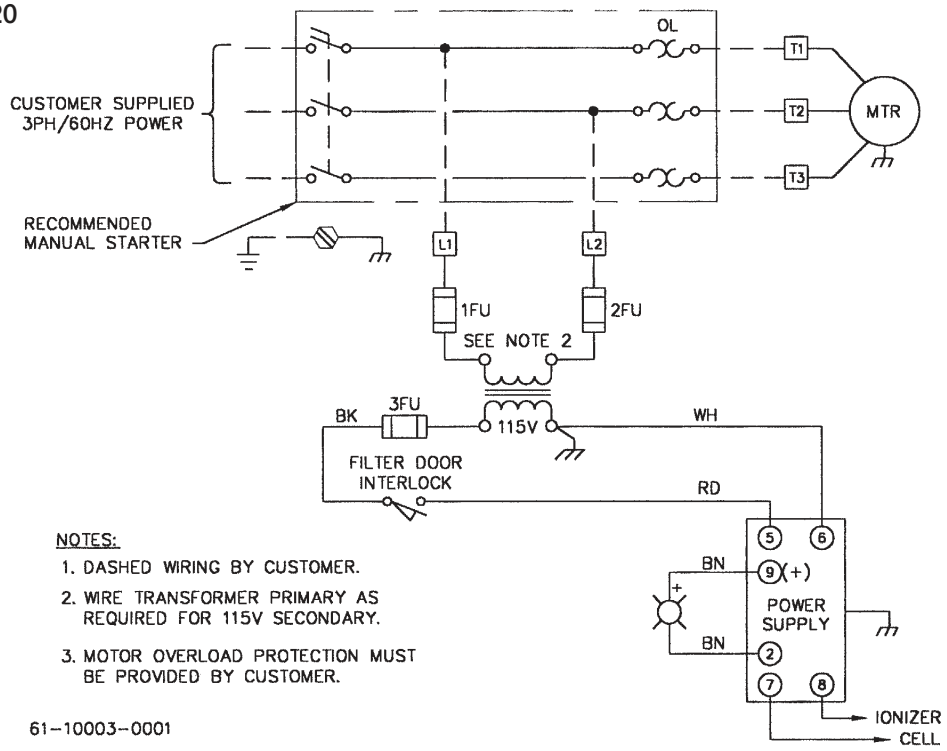

NOTES:

1. DASHED WIRING BY CUSTOMER.
2. WIRE TRANSFORMER PRIMARY AS REQUIRED FOR 115V SECONDARY.
3. MOTOR OVERLOAD PROTECTION MUST BE PROVIDED BY CUSTOMER.

61–10003–0001

SHN-10/20-XB

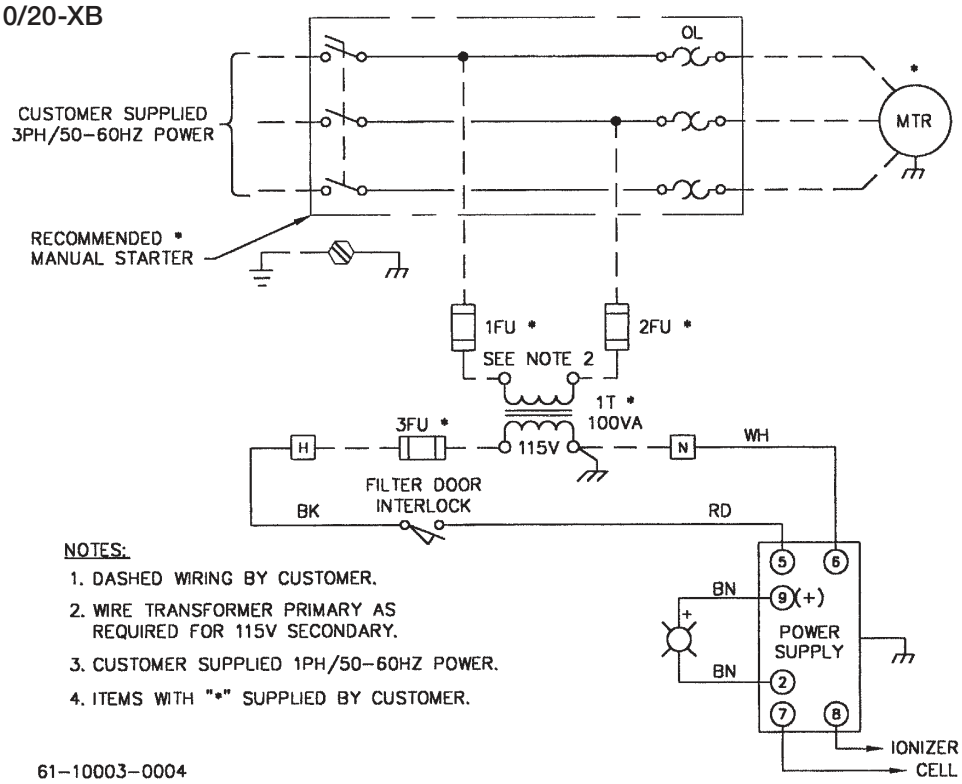

NOTES:

1. DASHED WIRING BY CUSTOMER.
2. WIRE TRANSFORMER PRIMARY AS REQUIRED FOR 115V SECONDARY.
3. CUSTOMER SUPPLIED 1PH/50–60HZ POWER.
4. ITEMS WITH "*" SUPPLIED BY CUSTOMER.

61–10003–0004

SHN-10/20-M

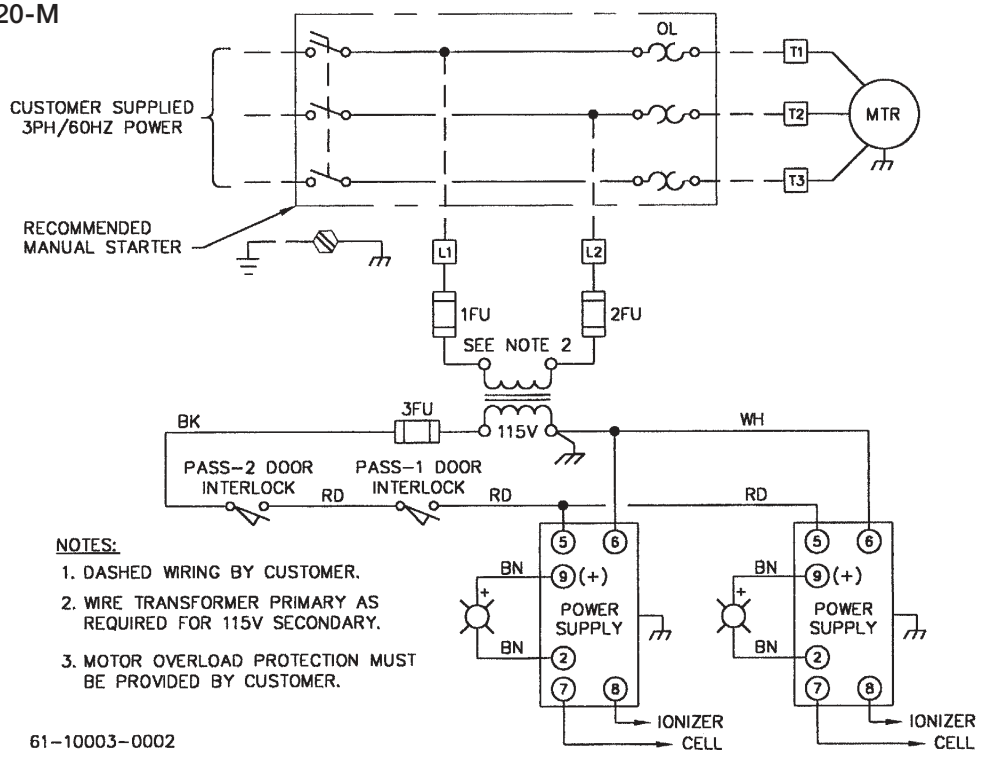

SHN-40

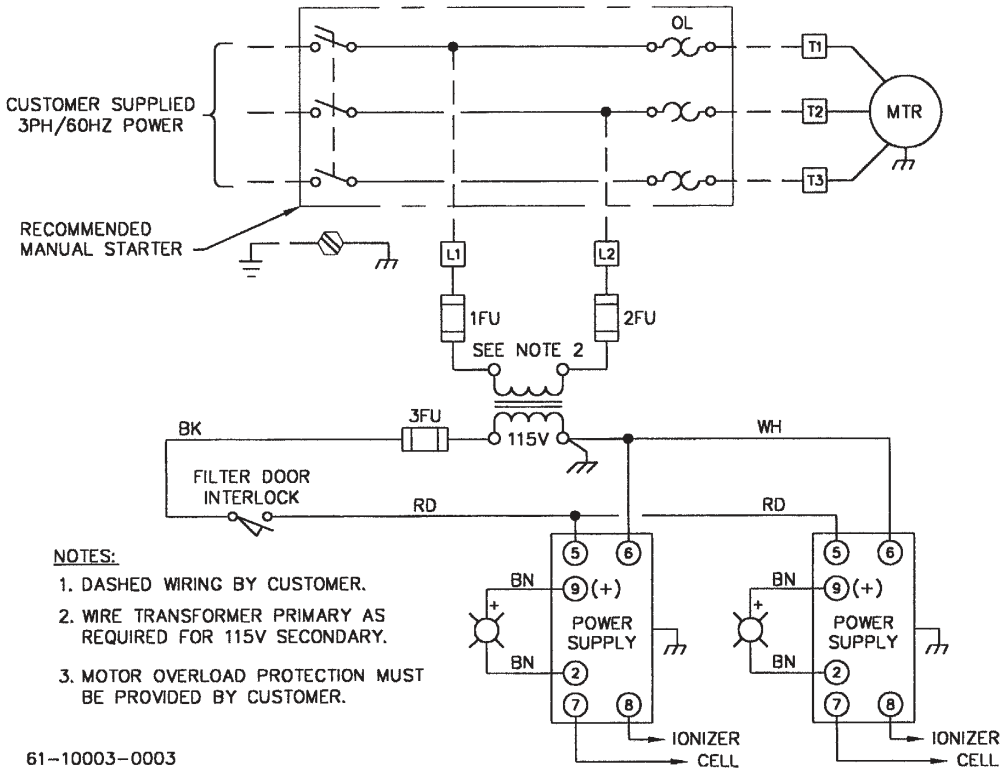

SHN-40-XB

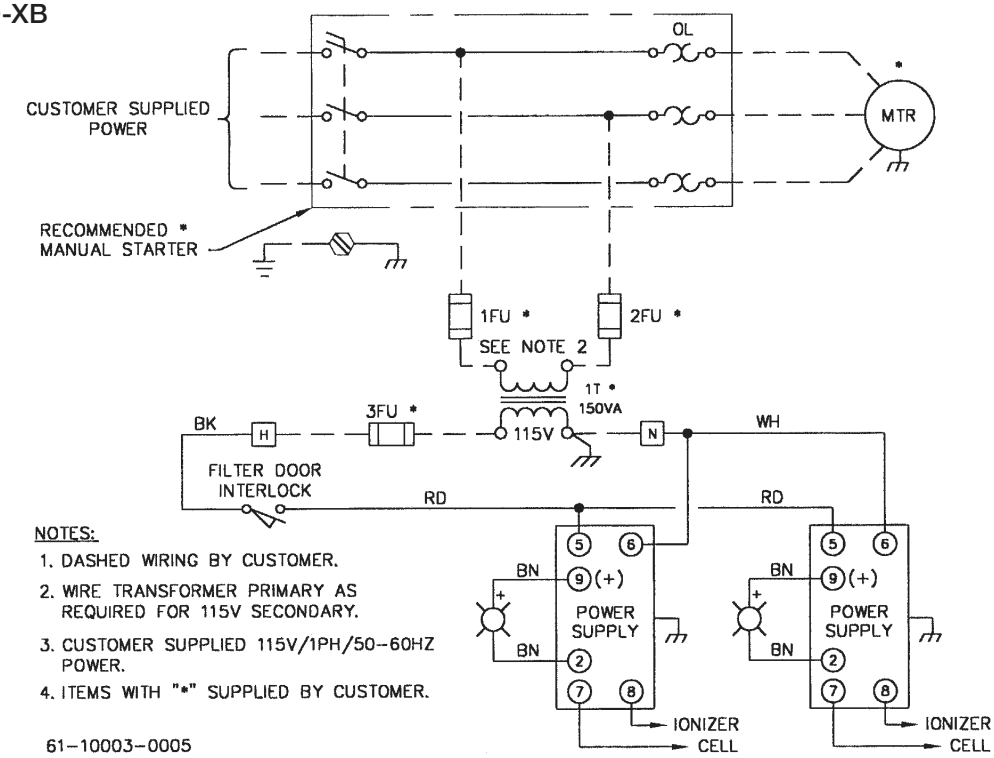

NOTES:

1. DASHED WIRING BY CUSTOMER.
2. WIRE TRANSFORMER PRIMARY AS REQUIRED FOR 115V SECONDARY.
3. CUSTOMER SUPPLIED 115V/1PH/50–60HZ POWER.
4. ITEMS WITH "*" SUPPLIED BY CUSTOMER.

61–10003–0005

SHN-40-M

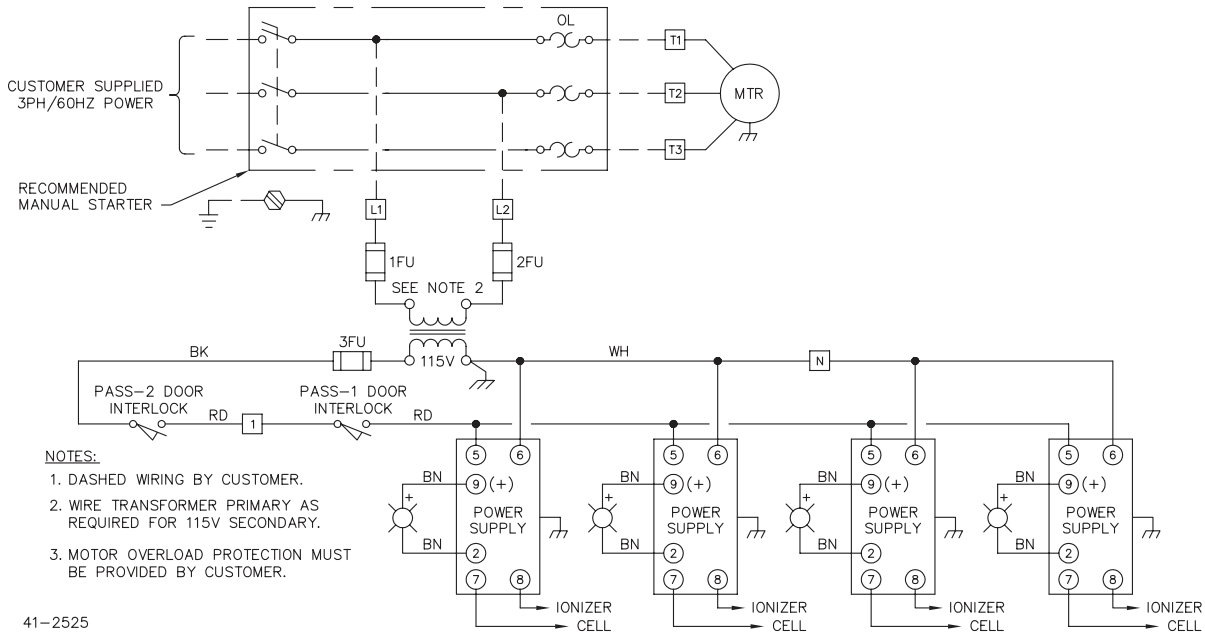

NOTES:

1. DASHED WIRING BY CUSTOMER.
2. WIRE TRANSFORMER PRIMARY AS REQUIRED FOR 115V SECONDARY.
3. MOTOR OVERLOAD PROTECTION MUST BE PROVIDED BY CUSTOMER.

41–2525

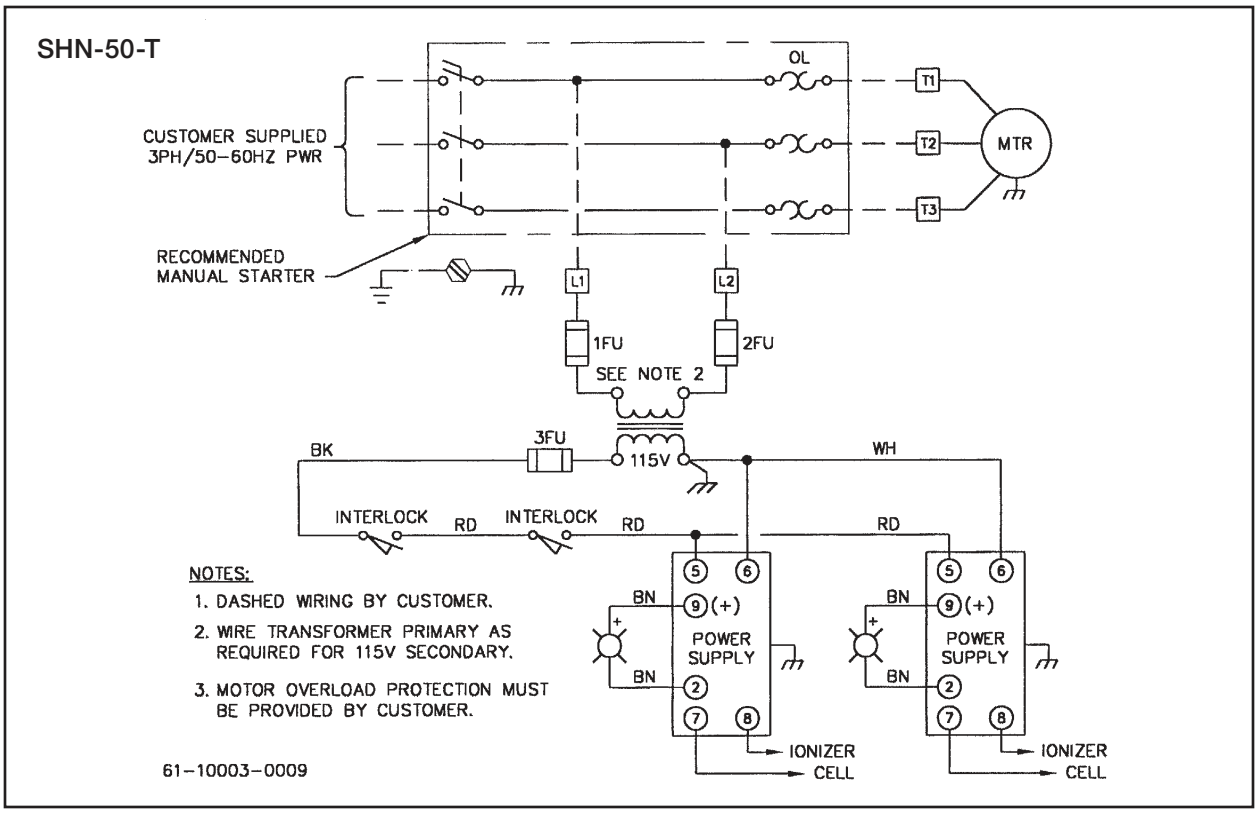
SHN-50-T
CUSTOMER SUPPLIED
3PH/50–60HZ PWR
OL
T1
T2
T3
MTR
RECOMMENDED
MANUAL STARTER
L1
L2
1FU
2FU
SEE NOTE 2
BK
3FU
115V
WH
INTERLOCK
RD
INTERLOCK
RD
RD
NOTES:
1. DASHED WIRING BY CUSTOMER.
2. WIRE TRANSFORMER PRIMARY AS REQUIRED FOR 115V SECONDARY.
3. MOTOR OVERLOAD PROTECTION MUST BE PROVIDED BY CUSTOMER.
BN
(+)
POWER SUPPLY
BN
IONIZER CELL
61–10003–0009

Product Warranty –
SMOG-HOG® and DUST-HOG® Pollution Control Systems

1. Subject to the terms and conditions hereof, Parker-Hannifin Corporation (PARKER) warrants that major structural components on MCB, PNP, SDC, SFC, and SHM series will be free from defects in materials and workmanship for ten (10) years from the date of shipment from Parker. Subject to the terms and conditions hereof, warrants to the original Buyer of any Parker product (PRODUCT) installed and used as recommended by PARKER in normal service, that if the PRODUCT fails or is materially defective within twenty-four (24) months from date of installation or thirty (30) months from the date of shipment (whichever is earlier), of such PRODUCT, then PARKER, at PARKER'S sole option, will replace the PRODUCT with the same or equivalent PRODUCT, repair the PRODUCT or refund the original purchase price for the PRODUCT. Such replacement, repair of payment by PARKER shall be in complete satisfaction of any and all liability of PARKER and its agents with respect to such PRODUCT. Excluded from any Parker warranty are hose, electrical motors or consumable products such as flexible hose, belts, filter cartridges, filter media, ESP cells, electrical components, gasketing, or any component defined by PARKER as a consumable item.

2. Parker IGFG's warranty policy covers defects that are due to manufacturing quality. Equipment must be installed, commissioned and maintained in accordance with Parker IGFG recommendations as documented in the specific user manual related to your dust or wet collector product. This warranty does not cover defects due to poor environmental conditions, improper installation, or wear and tear items. This warranty shall be void in case of:

a) Any buyer's modifications not explicitly approved by Parker IGFG Division,
b) Misuse or failure in maintenance - not in accordance with Parker's product recommendations,
c) Use of unauthorized or non-genuine Parker replacement parts,
d) Damage caused by corrosion, abrasion, abnormal use or misuse, misapplication, or normal wear and tear,
e) Equipment not properly installed, operated and maintained under normal conditions and recommended applications.

As Buyers exclusive remedy for any defects in the equipment, Parker will exchange or repair any defective parts during the warranty period, provided such parts are returned, prepaid, to Parker factory. The obligation of Parker is limited to furnishing replacement parts EXW Parker factory or making repairs at Parker factory of any parts that are determined, upon inspection by Parker, to be defective. In no event will Parker be responsible for labor or transportation charges for the removal, reshipment or reinstallation of the parts. Replacement parts will be provided via INCOTERMS EXW from Parker's Lancaster NY location. Parker makes no warranty as to goods manufactured or supplied by others.

3. THE FOREGOING IS THE ONLY WARRANTY, GUARANTEE OR REPRESENTATION OF ANY KIND MADE WITH RESPECT TO THE SUBJECT PARKER PRODUCTS. NO IMPLIED WARRANTY, INCLUDING ANY IMPLIED WARRANTY OF NONINFRINGEMENT, DESIGN, MERCHANTABILITY OR FITNESS FOR A PARTICULAR PURPOSE, APPLIES TO THE PRODUCT, AND NO OTHER EXPRESS WARRANTY OR GUARANTY, EXCEPT AS MENTIONED ABOVE, GIVEN BY ANY PERSON, FIRM OR CORPORATION WITH RESPECT TO THE PRODUCT SHALL BIND PARKER. PARKER SHALL NOT BE LIABLE FOR LOSS OF REVENUES OR PROFITS, EXPENSE FOR SUBSTITUTE EQUIPMENT OR SERVICE, STORAGE CHARGES, OR ANY OTHER SPECIAL, INCIDENTAL OR CONSEQUENTIAL DAMAGES CAUSED BY THE USE, MISUSE OR INABILITY TO USE THE PRODUCT REGARDLESS OF THE LEGAL THEORY ON WHICH THE CLAIM IS BASED, AND EVEN IF PARKER HAS BEEN ADVISED OF THE POSSIBILITY OF SUCH DAMAGES. NOR SHALL
RECOVERY OF ANY KIND AGAINST PARKER BE GREATER IN AMOUNT THAN THE PURCHASE PRICE OF THE PRODUCT SOLD BY PARKER AND CAUSING THE ALLEGED DAMAGE. WITHOUT LIMITING THE FOREGOING, YOU ASSUME ALL RISK AND LIABILITY FOR LOSS, DAMAGE OR INJURY TO YOU AND YOUR PROPERTY AND TO OTHERS AND THEIR PROPERTY ARISING OUT OF USE, MISUSE OR INABILITY TO USE THE PRODUCT NOT CAUSED DIRECTLY BY THE NEGLIGENCE OF PARKER. THIS LIMITED WARRANTY IS GIVEN ONLY WITH RESPECT TO A PRODUCT PURCHASED FROM PARKER OR AN AUTHORIZED PARKER DISTRIBUTOR.

4. IN NO EVENT IS PARKER LIABLE FOR ANY SPECIAL, INDIRECT, INCIDENTAL, OR CONSEQUENTIAL DAMAGES ARISING OUT OF, OR AS THE RESULT OF, THE SALE, DELIVERY, NON-DELIVERY, SERVICING, NONCOMPLETION OF SERVICES, USE, LOSS OF USE OF, OR INABILITY TO USE THE PRODUCT OR ANY PART THEREOF, LOSS OF DATA, IDENTITY, PRIVACY, OR CONFIDENTIALITY, OR FOR ANY CHARGES OR EXPENSES OF ANY NATURE INCURRED WITHOUT PARKER'S WRITTEN CONSENT, WETHER BASED IN CONTRACT, TORT OR OTHER LEGAL THEORY. IN NO EVENT SHALL PARKER'S LIABILITY UNDER ANY CLAIM MADE BY BUYER EXCEED THE PURCHASE PRICE PAID FOR THE PRODUCT.

5. Defective PRODUCTS must be documented via PARKER support "Case Number" within thirty (30) days after the date of the alleged failure or defect and within the warranty period by contacting Parker Technical Support via email or phone:

smoghog@parker.com or dusthog@parker.com
800-343-4048, option 2

The claim must specify in reasonable detail:
1) Product Serial Number or Parker Sales Order # and approximate Date of Purchase;
2) Where or from whom the product was originally purchased;
3) Description of problem symptom;
4) Description of troubleshooting effort details;
5) Description of physical location and/or environment details. The Buyer shall cooperate with PARKER in its investigation and provide full information and documentation concerning the PRODUCT and its usage.

Upon receipt of the claim, Parker IGFG will review and determine if the parts replaced need to be returned for quality evaluation and root cause investigation. If a part is required to be returned, Parker IGFG will issue a Return Material Authorization (RMA) to Return via email. Parts should be returned to Parker IGFG, freight collect, within 45 days accompanied by the RMA packing slip placed on the package. If the repaired part does not need to be returned you will be advised to field scrap it and the claim will be processed. Proof of the defect (written description and pictures of the parts units in question) is required.

NOTE: ANY PART NOT RETURNED WITHIN THE REQUIRED 45 DAYS WILL NOT BE REIMBURSED ON THE CLAIM.

On claims that require repaired parts return, the claim will be processed after the part has been evaluated by the Parker IGFG Quality Department for verification of failure mode. The claims will be paid in the form of a credit to the customer's account. Parker reserves the right to withdraw any quotation or proposal or reject any purchase order without liability.

Worldwide Filtration Manufacturing Locations

North America

Compressed Air Treatment

Industrial Gas Filtration and Generation Division
Lancaster, NY
716 686 6400
www.parker.com/igfg

Haverhill, MA
978 858 0505
www.parker.com/igfg

Engine Filtration

Racor
Modesto, CA
209 521 7860
www.parker.com/racor

Holly Springs, MS
662 252 2656
www.parker.com/racor

Hydraulic Filtration

Hydraulic & Fuel Filtration
Metamora, OH
419 644 4311
www.parker.com/hydraulicfilter

Laval, QC Canada
450 629 9594
www.parkerfarr.com

Velcon
Colorado Springs, CO
719 531 5855
www.velcon.com

Process Filtration

domnick hunter Process Filtration SciLog
Oxnard, CA
805 604 3400
www.parker.com/processfiltration

Water Purification

Village Marine, Sea Recovery, Horizon Reverse Osmosis
Carson, CA
310 637 3400
www.parker.com/watermakers

Europe

Compressed Air Treatment

domnick hunter Filtration & Separation
Gateshead, England
+44 (0) 191 402 9000
www.parker.com/dhfns

Parker Gas Separations
Etten-Leur, Netherlands
+31 76 508 5300
www.parker.com/dhfns

Hiross Zander
Essen, Germany
+49 2054 9340
www.parker.com/hzfd

Padova, Italy
+39 049 9712 111
www.parker.com/hzfd

Engine Filtration & Water Purification

Racor
Dewsbury, England
+44 (0) 1924 487 000
www.parker.com/rfde

Racor Research & Development
Stuttgart, Germany
+49 (0)711 7071 290-10

Hydraulic Filtration

Hydraulic Filter
Arnhem, Holland
+31 26 3760376
www.parker.com/hfde

Urjala, Finland
+358 20 753 2500

Condition Monitoring Parker Kittiwake
West Sussex, England
+44 (0) 1903 731 470
www.kittiwake.com

Process Filtration

domnick hunter Process Filtration Parker Twin Filter BV
Birtley, England
+44 (0) 191 410 5121
www.parker.com/processfiltration

Asia Pacific

Australia
Castle Hill, Australia
+61 2 9634 7777
www.parker.com/australia

China
Shanghai, China
+86 21 5031 2525
www.parker.com/china

India
Chennai, India
+91 22 4391 0700
www.parker.com/india

Parker Fowler
Bangalore, India
+91 80 2783 6794
www.johnfowlerindia.com

Japan
Tokyo, Japan
+81 45 870 1522
www.parker.com/japan

Korea
Hwaseon-City
+82 31 359 0852
www.parker.com/korea

Singapore
Jurong Town, Singapore
+65 6887 6300
www.parker.com/singapore

Thailand
Bangkok, Thailand
+66 2186 7000
www.parker.com/thailand

Latin America

Parker Comercio Ltda.
Filtration Division
Sao Paulo, Brazil
+55 12 4009 3500
www.parker.com/br

Pan American Division
Miami, FL
305 470 8800
www.parker.com/panam

Africa

Aeroport Kempton Park, South Africa
+27 11 9610700
www.parker.com/africa

IOM_PKR_SHN_112020 P/N 44-10272-0001

Parker Hannifin Corporation
Industrial Gas Filtration and Generation Division
4087 Walden Avenue
Lancaster, NY 14086
phone **800 343 4048**
www.parker.com/igfg

MANAGEMENT SYSTEM CERTIFICATION
DNV·GL
ISO 9001=ISO 14001